HC-B 10-AMLD-AL - Housing

1645477

https://www.phoenixcontact.com/us/products/1645477

Please be informed that the data shown in this PDF document is generated from our online catalog. Please find the complete data in the user documentation. Our general terms of use for downloads are valid.



Panel mounting base B10, with single locking latch, material: Die-cast aluminum, protective cover material: Al, height: 29 mm, cable gland: none, protective cover: yes, Standard, with flat gasket

Commercial data

Item number	1645477
Packing unit	1 pc
Note	Made to order (non-returnable)
Sales key	BF55
Product key	AF7AAC
GTIN	4046356028622
Weight per piece (including packing)	183.5 g
Weight per piece (excluding packing)	183.5 g
Customs tariff number	85369010
Country of origin	DE

Technical data

Notes

General	For contact inserts HC-B10, BB18, DD42, M, K8/24

Product properties

Product type	Housing with locking latch
Housing type	Panel mounting base
Application	Standard
Type	B10
Protective cover	yes
Shielded	no
Pg screw connection	none

Dimensions

Dimensional drawing	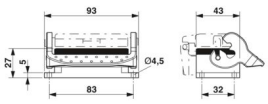
Width	43 mm
Height	29 mm
Length	93 mm

Installation dimensions

Width of the assembly cutout	35 mm
Length of the assembly cutout	65 mm

Material specifications

Seal material	NBR (profile gasket)
	CR (Flat gasket)
Housing material	Die-cast aluminum
Housing surface material	Powder-coated, gray
Material, protective cover	Al
Locking latch material	Stainless steel, handle: PA

Mechanical properties

Mechanical data

Locking type	Latch

Connection data

Tightening torque	1.5 Nm ... 2 Nm (Mounting screw)

Environmental and real-life conditions

Ambient conditions

Degree of protection	IP65 (When plugged in)
	IP54 (with closed protective cover)
Ambient temperature (operation)	-40 °C ... 125 °C

Drawings

Dimensional drawing

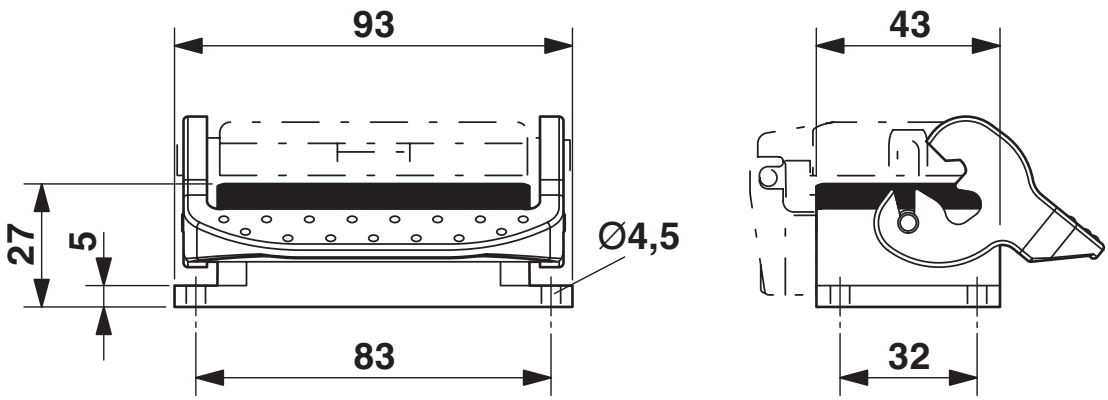

Dimensional drawing

Dimensional drawing

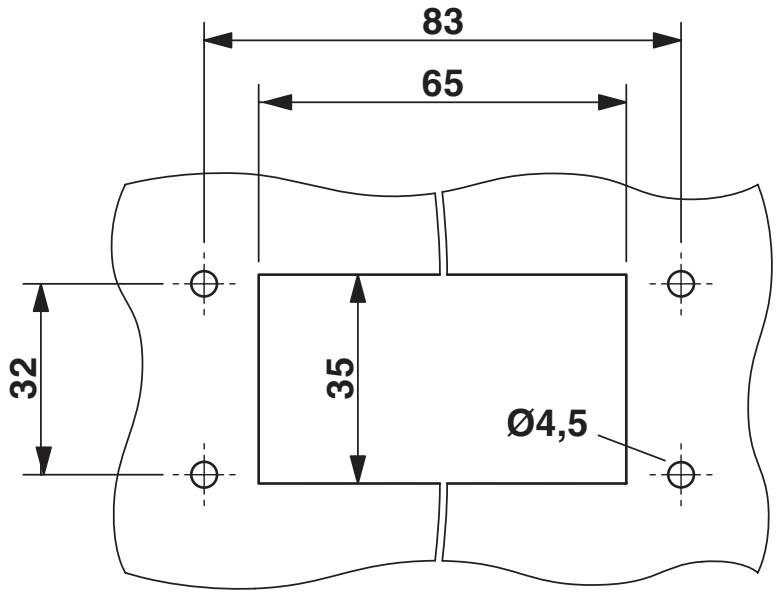

Mounting cutout

Classifications

ECLASS

ECLASS-13.0	27440202
ECLASS-15.0	27440202

UNSPSC

UNSPSC 21.0	31261500

Environmental product compliance

EU RoHS

Fulfills EU RoHS substance requirements	Yes, No exemptions

China RoHS

Environment friendly use period (EFUP)	EFUP-E
	No hazardous substances above the limits

EU REACH SVHC

REACH candidate substance (CAS No.)	No substance above 0.1 wt%

Phoenix Contact 2026 © - all rights reserved
https://www.phoenixcontact.com

Phoenix Contact USA
586 Fulling Mill Road
Middletown, PA 17057, United States
(+717) 944-1300
info@phoenixcon.com