Q 0,75/4IDC/18-18KU-KU BK - Conductor connector

1642140

https://www.phoenixcontact.com/us/products/1642140

Please be informed that the data shown in this PDF document is generated from our online catalog. Please find the complete data in the user documentation. Our general terms of use for downloads are valid.



Conductor connector, connection method: IDC connection, 0.34 mm^2 ... 0.75 mm^2, 250 V, 9 A, black, coding: no, external cable diameter: 4 mm ... 8 mm

Your advantages

- Innovative and time saving - QUICKON fast connection for time saving of up to 80 % for on-site connection
- Robust throughout: housing with IP68/IP69K and IK07 protection for a wide range of applications
- Safer connection with mechanical coding to protect against mismatching, and touch-proof protection in accordance with DIN EN 0105
- Easy and safe - with the cable connector, you can repair or extend cables quickly, in combination with the connector as well as the coupling connection

Commercial data

Item number	1642140
Packing unit	1 pc
Minimum order quantity	1 pc
Sales key	BF50
Product key	AF6HCB
GTIN	4017918923891
Weight per piece (including packing)	18.2 g
Weight per piece (excluding packing)	14.12 g
Customs tariff number	85366990
Country of origin	DE

Technical data

Product properties

Product type	Cable connector
Number of positions	4
Position marking	1, 2, 3, 4
Number of connections	4
Number of connections per position	1
Coding	no

Insulation characteristics

Overvoltage category	III
Degree of pollution	3

Dimensions

Dimensional drawing	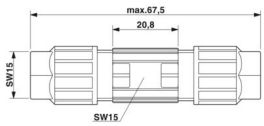
Width	15 mm
Height	15 mm
Length	67.5 mm
Diameter	15 mm

Connection data

Connection technology

Frequency of connections between conductors of the same cross section	max. 10

Conductor connection

Tightening torque	1.2 Nm
Tightening torque Union nut	1.2 Nm
Wrench size Union nut	15 mm
Wrench size Contact carrier	15 mm

Electrical properties

Rated surge voltage (II/2)	4 kV
Rated surge voltage (III/2)	4 kV
Rated surge voltage (III/3)	4 kV
Rated current	9 A
Contact resistance	≤ 5 mΩ
rated voltage (II/2)	500 V
rated voltage (III/2)	400 V

Rated voltage (III/3)	250 V
Insulation resistance	≥ 100 MΩ
Nominal voltage U_N	400 V AC
	400 V DC
Nominal current I_N	9 A

Material specifications

Color	black (RAL 9005)
Material Housing	PA
Material Contact	Steel
Material Contact surface	Sn
Flammability rating according to UL 94	V0
Material wire insulation	PVC/PE/TPE/rubber

Cable/line

Structure of individual litz in acc. with VDE 0295 / smallest wire diameter	VDE 0295 class 1 to 6/min. 0.15 mm
External cable diameter	4 mm ... 8 mm
Wire diameter including insulation	1.3 mm ... 2.6 mm
Position marking	1, 2, 3, 4
Material wire insulation	PVC / PE

Environmental and real-life conditions

Ambient conditions

Degree of protection	IP65
	IP67
Impact strength	IK06
Ambient temperature (operation) (male connector/female connector)	-40 °C ... 80 °C
Temperature when conductor connected	-5 °C ... 50 °C
Ambient temperature (storage/transport)	-40 °C ... 80 °C

Drawings

Dimensional drawing

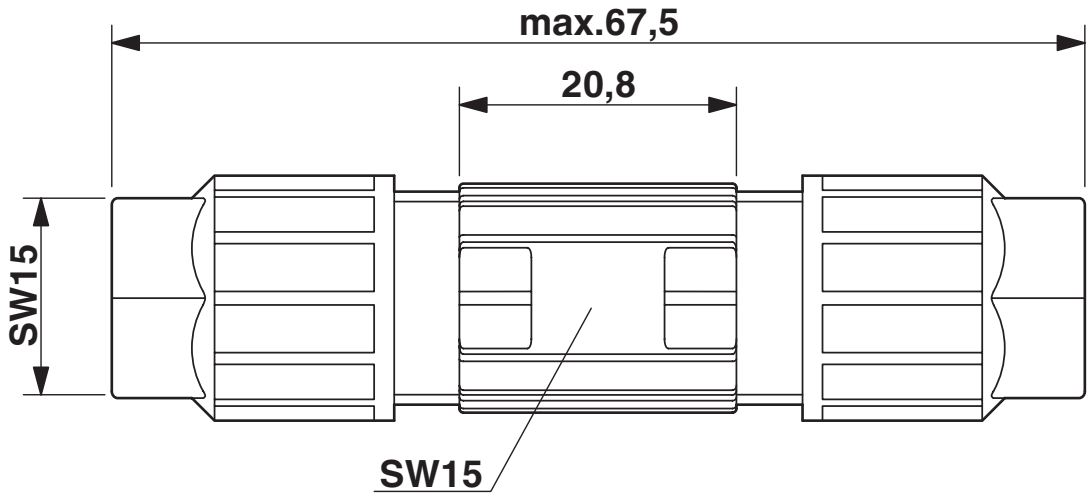

Functional drawing

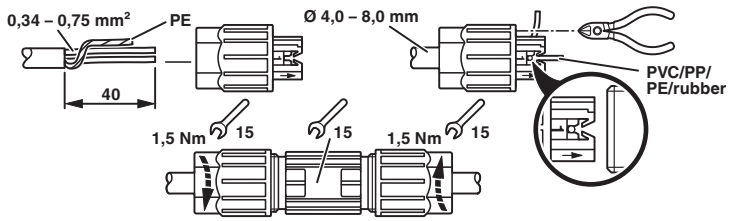

Approvals

To download certificates, visit the product detail page: https://www.phoenixcontact.com/us/products/1642140

cUL Recognized
Approval ID: E118976

	Nominal voltage U_N	Nominal current I_N	Cross section AWG	Cross section mm^2
keine				
	250 V	6 A	-	-

UL Recognized
Approval ID: E118976

	Nominal voltage U_N	Nominal current I_N	Cross section AWG	Cross section mm^2
keine				
	250 V	9 A	-	-

EAC
Approval ID: RU C-DE.AI30.B.01102

EAC
Approval ID: RU C-DE.A*30.B.01102

VDE Zeichengenehmigung
Approval ID: 40030930

	Nominal voltage U_N	Nominal current I_N	Cross section AWG	Cross section mm^2
keine				
	400 V	-	-	-

Classifications

ECLASS

ECLASS-13.0	27440605
ECLASS-15.0	27440605

ETIM

ETIM 10.0	EC002560

UNSPSC

UNSPSC 21.0	39121400

Environmental product compliance

EU RoHS

Fulfills EU RoHS substance requirements	Yes, No exemptions

China RoHS

Environment friendly use period (EFUP)	EFUP-E
	No hazardous substances above the limits

EU REACH SVHC

REACH candidate substance (CAS No.)	No substance above 0.1 wt%

Phoenix Contact 2026 © - all rights reserved
https://www.phoenixcontact.com

Phoenix Contact USA
586 Fulling Mill Road
Middletown, PA 17057, United States
(+717) 944-1300
info@phoenixcon.com