SACC-M12MS-4QO-0,34 - Connector

1641714

https://www.phoenixcontact.com/us/products/1641714

Please be informed that the data shown in this PDF document is generated from our online catalog. Please find the complete data in the user documentation. Our general terms of use for downloads are valid.



Connector, Universal, 4-position, Plug straight M12, coding: A, Insulation displacement connection, knurl material: Plastic, external cable diameter 3.5 mm ... 6 mm

Your advantages

- Safe use in the field, thanks to a high degree of protection
- Insulation displacement connection: innovative and time-saving assembly without stripping the single wire

Commercial data

Item number	1641714
Packing unit	1 pc
Minimum order quantity	1 pc
Sales key	BF31
Product key	AF2CCA
GTIN	4017918925161
Weight per piece (including packing)	11.5 g
Weight per piece (excluding packing)	11.7 g
Customs tariff number	85366990
Country of origin	DE

Technical data

Notes

Assembly note	NOTE: Observe the permissible bending radii when routing cables, since the degree of protection may be at risk if the bending forces are too high. Reduce mechanical loads upstream of the connector, e.g., by using cable ties.

Mounting

Assembly note	AWG 20 conductor cross-section upon request

Product properties

Product type	Circular connector (cable-side)
Number of positions	4
No. of cable outlets	1
Shielded	no
Coding	A
Cable outlet	straight

Insulation characteristics

Overvoltage category	III
Degree of pollution	3

Dimensions

Dimensional drawing	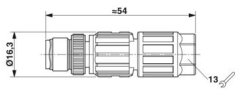
Length	54 mm
Wrench size, union nut	13 mm

External dimensions

Outside diameter	3.5 mm ... 6 mm

Housing

Diameter housing	16.3 mm

Material specifications

Flammability rating according to UL 94	V0
Seal material	NBR
Material of grip body	PA 6
Contact material	CuSn
Contact surface material	Ni/Au
Contact carrier material	TPU

Material for screw connection	Plastic
Wire insulation material	PVC / PE / PP / rubber

Connection data

Conductor connection

Connection method	Insulation displacement connection
Connection cross section	0.14 mm² ... 0.34 mm²
Connection cross section AWG	26 ... 22
Tightening torque	0.4 Nm (M12 knurl)
	1.2 Nm (Pressure nut)

Connection assignment

Contact | Color (signal designation) | Contact (optional)	1 = BN
	2 = WH
	3 = BU
	4 = BK

Electrical properties

Rated surge voltage	2.5 kV
Insulation resistance	≥ 100 MΩ
Nominal voltage U_N	125 V AC
	125 V DC
Nominal current I_N	4 A

Mechanical properties

Mechanical data

Insertion/withdrawal cycles	≥ 100

Connector

Connection 1

Head design	Plug
Head cable outlet	straight
Head thread type	M12
Coding	A

Interfaces

Signal type/category	Universal

Cable/line

External cable diameter	3.5 mm ... 6 mm

Environmental and real-life conditions

Ambient conditions

Degree of protection	IP65
	IP67
Ambient temperature (operation) (male connector/female connector)	-25 °C ... 80 °C (Plug / socket)
Ambient temperature (assembly)	-5 °C ... 50 °C (During assembly)

Standards and regulations

M12

Standard designation	M12 connector
Standards/specifications	according to IEC 61076-2-101

Drawings

Dimensional drawing

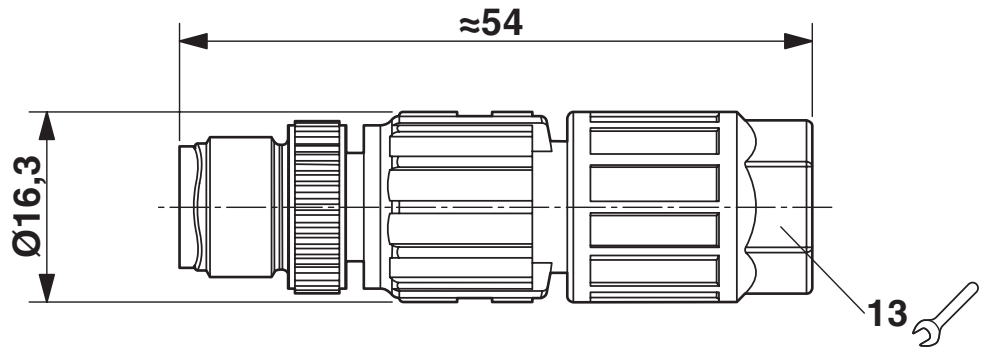

Plug, M12 x 1, straight, shielded

Functional drawing

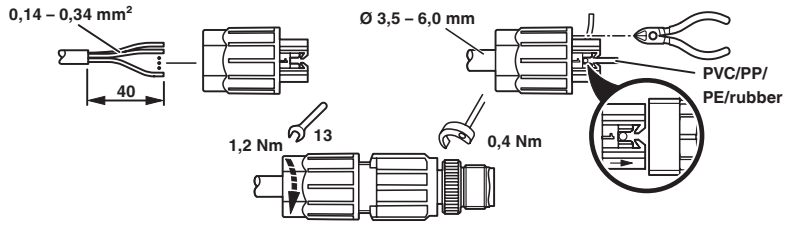

Schematic diagram

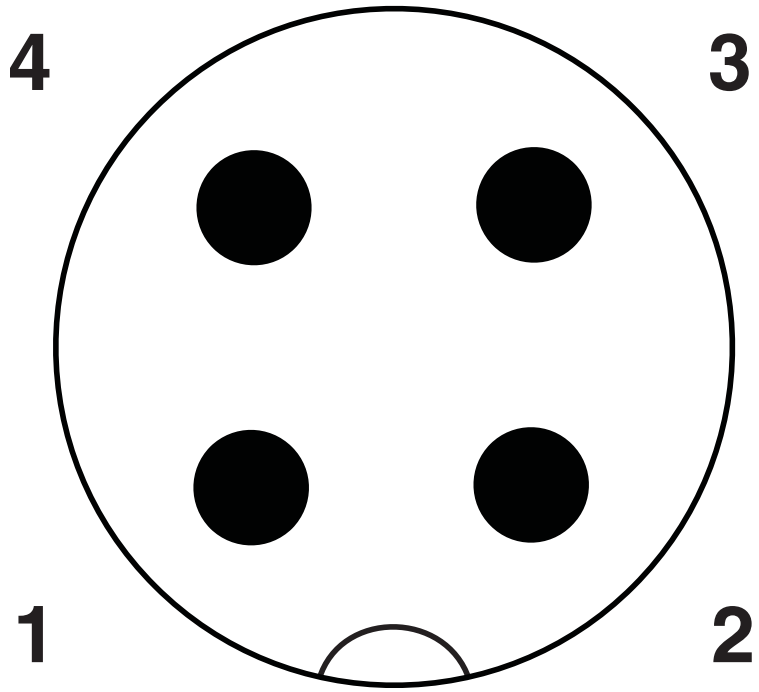

Pin assignment M12 plug, 4-pos., A-coded, view plug side

Approvals

To download certificates, visit the product detail page: https://www.phoenixcontact.com/us/products/1641714

cUL Recognized
Approval ID: E118976

	Nominal voltage U_N	Nominal current I_N	Cross section AWG	Cross section mm^2
keine				
	300 V	4 A	-	-

UL Recognized
Approval ID: E118976

	Nominal voltage U_N	Nominal current I_N	Cross section AWG	Cross section mm^2
keine				
	300 V	4 A	-	-

Classifications

ECLASS

ECLASS-13.0	27440116
ECLASS-15.0	27440116

ETIM

ETIM 10.0	EC002635

UNSPSC

UNSPSC 21.0	39121400

Environmental product compliance

EU RoHS

Fulfills EU RoHS substance requirements	Yes, No exemptions

China RoHS

Environment friendly use period (EFUP)	EFUP-E
	No hazardous substances above the limits

EU REACH SVHC

REACH candidate substance (CAS No.)	No substance above 0.1 wt%

Phoenix Contact 2026 © - all rights reserved
https://www.phoenixcontact.com

Phoenix Contact USA
586 Fulling Mill Road
Middletown, PA 17057, United States
(+717) 944-1300
info@phoenixcon.com