Q 0,75/3FL/ 9-M16KU-ESA BK - Panel feed-through

1641497

https://www.phoenixcontact.com/us/products/1641497

Please be informed that the data shown in this PDF document is generated from our online catalog. Please find the complete data in the user documentation. Our general terms of use for downloads are valid.



QUICKON panel feed-through, for external panel mounting with manual solder/slip-on connection, 2.8 x 0.8 mm, 3-pos.

Commercial data

Item number	1641497
Packing unit	10 pc
Minimum order quantity	10 pc
Sales key	BF50
Product key	AF6HAA
GTIN	4017918219581
Weight per piece (including packing)	16.44 g
Weight per piece (excluding packing)	16.2 g
Customs tariff number	85369010
Country of origin	PL

Technical data

Product properties

Product type	Panel feed-through
Number of positions	3
Position marking	1, 2, 3
Number of connections	3
No. of cable outlets	0

Insulation characteristics

Overvoltage category	III
Degree of pollution	3

Connection data

Connection technology

Connection method On the device side	Manual solder/slip on connection (2.8 mm x 0.8 mm)
Frequency of connections between conductors of the same cross section	max. 10 (if the conductor is connected more than once, seal and cap may need to be replaced.)

Conductor connection

Conductor cross-section flexibel	0.34 mm² ... 0.75 mm²
Conductor cross-section solid	0.75 mm² ... 1 mm²
Connection cross section AWG	18 ... 16
Tightening torque Union nut	2.5 Nm
Tightening torque Contact carrier	3.75 Nm
Tightening torque Locking nut	3.75 Nm
Wrench size Union nut	19 mm
Wrench size Contact carrier	19 mm

Dimensions

Dimensional drawing	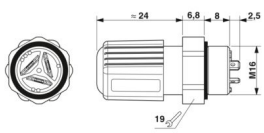
Width	19 mm
Height	19 mm
Length	41.3 mm

Electrical properties

Rated surge voltage (II/2)	4 kV
Rated surge voltage (III/2)	4 kV
Rated surge voltage (III/3)	4 kV
Rated current	9 A

Contact resistance	< 3 mΩ
rated voltage (II/2)	320 V (with insulating sleeve)
rated voltage (III/2)	160 V (with insulating sleeve)
Rated voltage (III/3)	160 V (with insulating sleeve)
Nominal voltage U_N	160 V AC
	160 V DC
Nominal current I_N	9 A

Material specifications

Color	black (RAL 9005)
Material Housing	PA
Material Contact	CuZn
Material Contact surface	tin-plated
Flammability rating according to UL 94	V0
Suitable for outdoor use	f1 (UL 746C)
Material wire insulation	PVC / PE

Cable/line

Structure of individual litz in acc. with VDE 0295 / smallest wire diameter	VDE 0295 class 1 to 6/min. 0.15 mm
External cable diameter	5 mm ... 6.8 mm
Wire diameter including insulation	2.5 mm
Position marking	1, 2, 3
Material wire insulation	PVC/PE/TPE/rubber

Mounting

Mounting type	Front mounting M16
Assembly note	If the conductor is reconnected, it must be cut off above the last contact point. QUICKON components may only be operated when under no load.

Environmental and real-life conditions

Ambient conditions

Degree of protection	IP65
	IP67
Impact strength	IK07
Ambient temperature (operation)	-25 °C ... 80 °C (Specifications of the cable manufacturer must be observed.)
	-25 °C ... 50 °C (when the conductor is connected. Specifications of the cable manufacturer must also be observed.)
Temperature when conductor connected	-5 °C ... 50 °C (specifications of the cable manufacturer must also be observed)

Drawings

Dimensional drawing

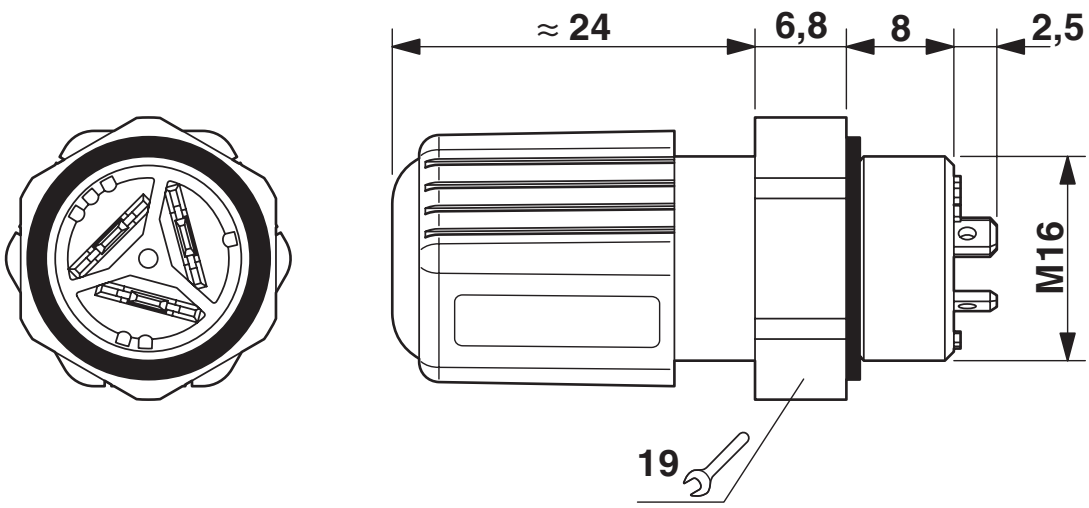

Approvals

To download certificates, visit the product detail page: https://www.phoenixcontact.com/us/products/1641497

cUL Recognized
Approval ID: E118976

	Nominal voltage U_N	Nominal current I_N	Cross section AWG	Cross section mm^2
keine				
	250 V	6 A	-	-

UL Recognized
Approval ID: E118976

	Nominal voltage U_N	Nominal current I_N	Cross section AWG	Cross section mm^2
keine				
	250 V	9 A	-	-

EAC
Approval ID: RU C-DE.AI30.B.01102

EAC
Approval ID: RU C-DE.A*30.B.01102

Classifications

ECLASS

ECLASS-13.0	27440602
ECLASS-15.0	27440602

ETIM

ETIM 10.0	EC002566

UNSPSC

UNSPSC 21.0	39121500

Environmental product compliance

EU RoHS

Fulfills EU RoHS substance requirements	Yes, No exemptions

China RoHS

Environment friendly use period (EFUP)	EFUP-E
	No hazardous substances above the limits

EU REACH SVHC

REACH candidate substance (CAS No.)	No substance above 0.1 wt%

EF3.1 Climate Change

CO2e kg	0.127 kg CO2e

Phoenix Contact 2026 © - all rights reserved
https://www.phoenixcontact.com

Phoenix Contact USA
586 Fulling Mill Road
Middletown, PA 17057, United States
(+717) 944-1300
info@phoenixcon.com