HC-M-EMV-ST/3-9,5 - Connector

1636088

https://www.phoenixcontact.com/us/products/1636088

Please be informed that the data shown in this PDF document is generated from our online catalog. Please find the complete data in the user documentation. Our general terms of use for downloads are valid.



HEAVYCON EMC connector, pin version, 4-pos., for connecting shielded conductors with 3 ... 9.5 mm external conductor diameter. For use in the HC-M-02-EMC-M plastic module

Commercial data

Item number	1636088
Packing unit	1 pc
Minimum order quantity	1 pc
Sales key	BF62
Product key	AF7ACB
GTIN	4017918962920
Weight per piece (including packing)	32.129 g
Weight per piece (excluding packing)	27.2 g
Customs tariff number	85389099
Country of origin	CN

Technical data

Notes

General	The potential of the EMC connector housing is isolated from the potential of the heavy connector.
General	for CK 1,6...ED... crimp contacts (note in scope of delivery)
General	Clamps for the clamping range of 3 mm - 6 mm and 6 mm - 9. 5 mm

Product properties

Product type	EMC insert, modular
Series	HC-M-EMV
Application	Data/signal
Number of positions	4
Connection profile	4
Contact numbering	1 - 4
No. of cable outlets	1
No. of power contacts	0
No. of control contacts	4
Contact material type	turned
	rolled
Shielded	yes

Insulation characteristics

Overvoltage category	III
Degree of pollution	3

Electrical properties

Rated voltage (III/3)	48 V
Rated surge voltage	0.8 kV
Rated current	10 A
Transmission characteristics (category)	CAT5e

Connection data

Connection technology

Connection technology	Crimp connection

Conductor connection

Conductor cross-section	0.14 mm² ... 2.5 mm²
Connection cross section AWG	26 ... 14
Stripping length of the individual wire	8 mm (6 mm with 2.5 mm²)

Dimensions

Dimensional drawing	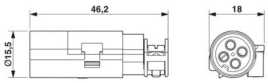
Width	18 mm
Height	15.5 mm
Length	46 mm

Mechanical characteristics

Contact diameter	1.6 mm

Material specifications

Material	Zinc alloy
Flammability rating according to UL 94	V0
Contact material	Copper alloy
Contact surface material	Ag (alternatively Au)
Contact carrier material	PC

Cable/line

External cable diameter	3 mm ... 9.5 mm
Wire diameter including insulation	2.4 mm

Mechanical properties

Mechanical data

Insertion/withdrawal cycles	≥ 500

Environmental and real-life conditions

Ambient conditions

Ambient temperature (operation)	-40 °C ... 85 °C

Mounting

Assembly note	Housing height ≥ 72 mm. Plug-in connections may only be operated only when there is no load/voltage.
	For use in HC-M-EMV-MOD-ST plastic module, usable CK1,6-ED-... crimp contacts

Drawings

Dimensional drawing

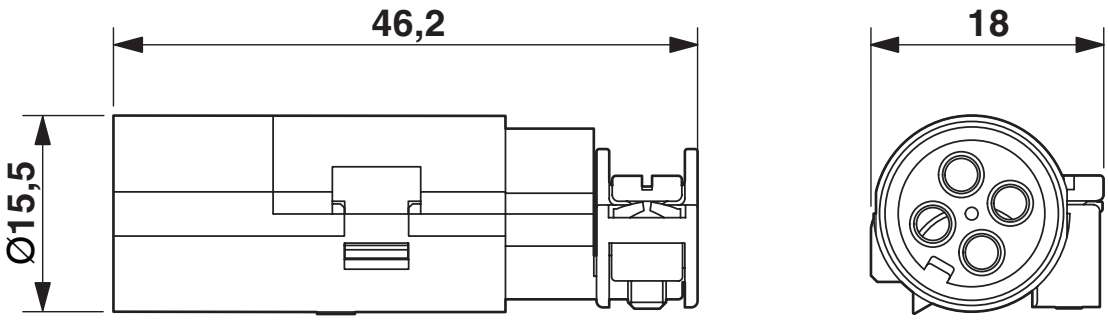

Male insert

Dimensional drawing

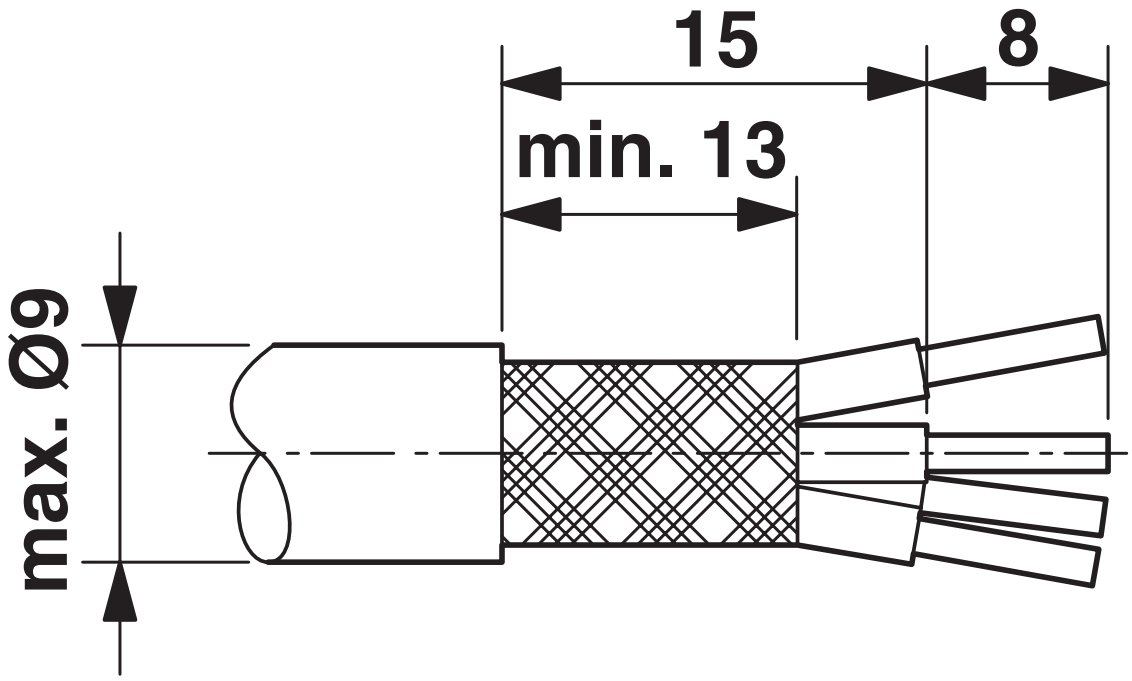

Stripping specifications

Functional drawing

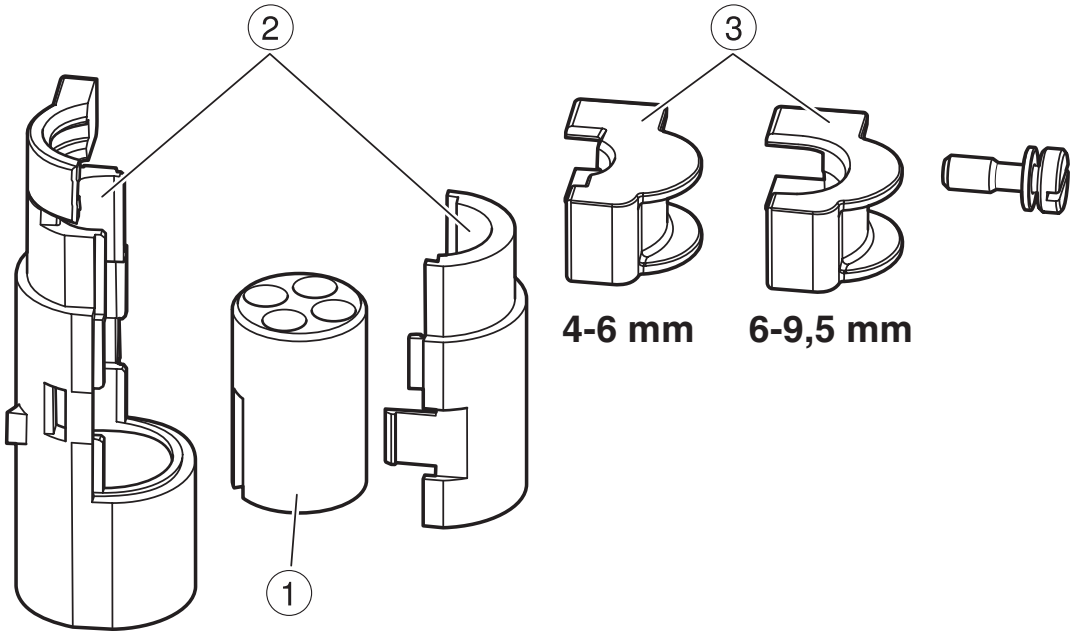

Assembly instruction:

Strip the cable as shown. Lay the braided shield around the cable sheath, and secure with shrink sleeve. Mount the contact carrier in the EMC connector and put on the metal half-shells. Crimp the wires with crimp contacts and snap the contacts into the contact carrier (check to ensure position assignment is correct). Mount the clip and snap the EMC connector into the EMC module. Lastly, place the module in the snap-in frame.

Approvals

To download certificates, visit the product detail page: https://www.phoenixcontact.com/us/products/1636088

cUL Recognized
Approval ID: E118976

	Nominal voltage U_N	Nominal current I_N	Cross section AWG	Cross section mm^2
keine				
	42 V	9 A	- 16	-

UL Recognized
Approval ID: E118976

	Nominal voltage U_N	Nominal current I_N	Cross section AWG	Cross section mm^2
keine				
	42 V	10 A	- 16	-

Classifications

ECLASS

ECLASS-13.0	27440205
ECLASS-15.0	27440205

ETIM

ETIM 10.0	EC000438

UNSPSC

UNSPSC 21.0	39121500

Environmental product compliance

EU RoHS

Fulfills EU RoHS substance requirements	Yes, No exemptions

China RoHS

Environment friendly use period (EFUP)	EFUP-E
	No hazardous substances above the limits

EU REACH SVHC

REACH candidate substance (CAS No.)	No substance above 0.1 wt%

EF3.1 Climate Change

CO2e kg	6.314 kg CO2e

Phoenix Contact 2026 © - all rights reserved
https://www.phoenixcontact.com

Phoenix Contact USA
586 Fulling Mill Road
Middletown, PA 17057, United States
(+717) 944-1300
info@phoenixcon.com