PRC 20/M17-6E-FT25-MC GY - Device connector front mounting

1636043

https://www.phoenixcontact.com/us/products/1636043

Please be informed that the data shown in this PDF document is generated from our online catalog. Please find the complete data in the user documentation. Our general terms of use for downloads are valid.



Device connector front mounting, Range of articles: PRC 20, design: Straight, color: black, number of positions: 7, min. conductor cross-section: 0.75 mm^2, max. conductor cross-section: 1 mm^2, rated voltage: Dreiphasig 630 V AC, rated current: 8.5 A, Connection method: Crimp connection, min. cable diameter: 6 mm, max. cable diameter: 14 mm, Setting option for release: 1. with a tool or 2. by hand

Your advantages

- Duo-Unlock technology for greater flexibility during installation and maintenance
- Reliable use under extreme ambient conditions with high degrees of protection and impact strength
- Easy handling with proven crimp connection technology
- Mechanical and color coding for quick and error-free startup

Commercial data

Item number	1636043
Packing unit	1 pc
Minimum order quantity	1 pc
Sales key	AB03
Product key	ABLHMA
GTIN	4067923159006
Weight per piece (including packing)	29.1 g
Weight per piece (excluding packing)	18.605 g
Customs tariff number	85366990
Country of origin	PL

PRC 20/M17-6E-FT25-MC GY - Device connector front mounting

1636043

https://www.phoenixcontact.com/us/products/1636043

Technical data

Notes

Order information:	Setting option for release: 1. with a tool or 2. by hand
Note on application	For assembly notes, please refer to the packing slip

Product properties

Product type	Panel feed-through
Product family	PRC 20
Type	Straight
Number of positions	7
Connection profile	6+PE
Coding	M17 6+PE

Insulation characteristics

Protection class	II (double or reinforced insulation)

Connection data

Connection technology

Connection method	Crimp connection

Dimensions

Dimensional drawing	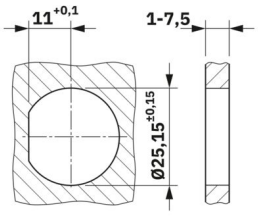
Width	34 mm
Height	38.4 mm
Length	49.7 mm

Electrical properties

Rated voltage	Dreiphasig 630 V AC (III/2) in accordance with IEC 61984
	500 V DC (III/2) in accordance with IEC 61984
Rated current	8.5 A (with 1 mm² conductor cross-section in accordance with IEC 61984)
	8 A (with 0.75 mm² conductor cross-section in accordance with IEC 61984)

Mechanical properties

Mechanical data

Insertion/withdrawal cycles	100

Material specifications

Color (Housing)	black (RAL 9005)
Color (Locking)	gray (RAL 7042)

Cable/line

External cable diameter	6 mm ... 14 mm
Single wire, cross section	0.75 mm² 1 mm²
Halogen-free	yes (in accordance with IEC 61249-2-21:2003- 11 Cl.3.1)

Mounting

Mounting type	Front mounting
Thread type	M25 x 1,5 (DIN EN 60423)

Environmental and real-life conditions

Ambient conditions

Degree of protection	IP66
	IP66 (2 m / 2 h)
	IP69
Category of shock impact	IK08 (-25°C)
Ambient temperature (operation)	-40 °C ... 85 °C (observe derating)
Ambient temperature (storage/transport)	-10 °C ... 50 °C
Ambient temperature (assembly)	-5 °C ... 50 °C

Standards and regulations

Standards/specifications	IEC 61984:2008

Drawings

Dimensional drawing

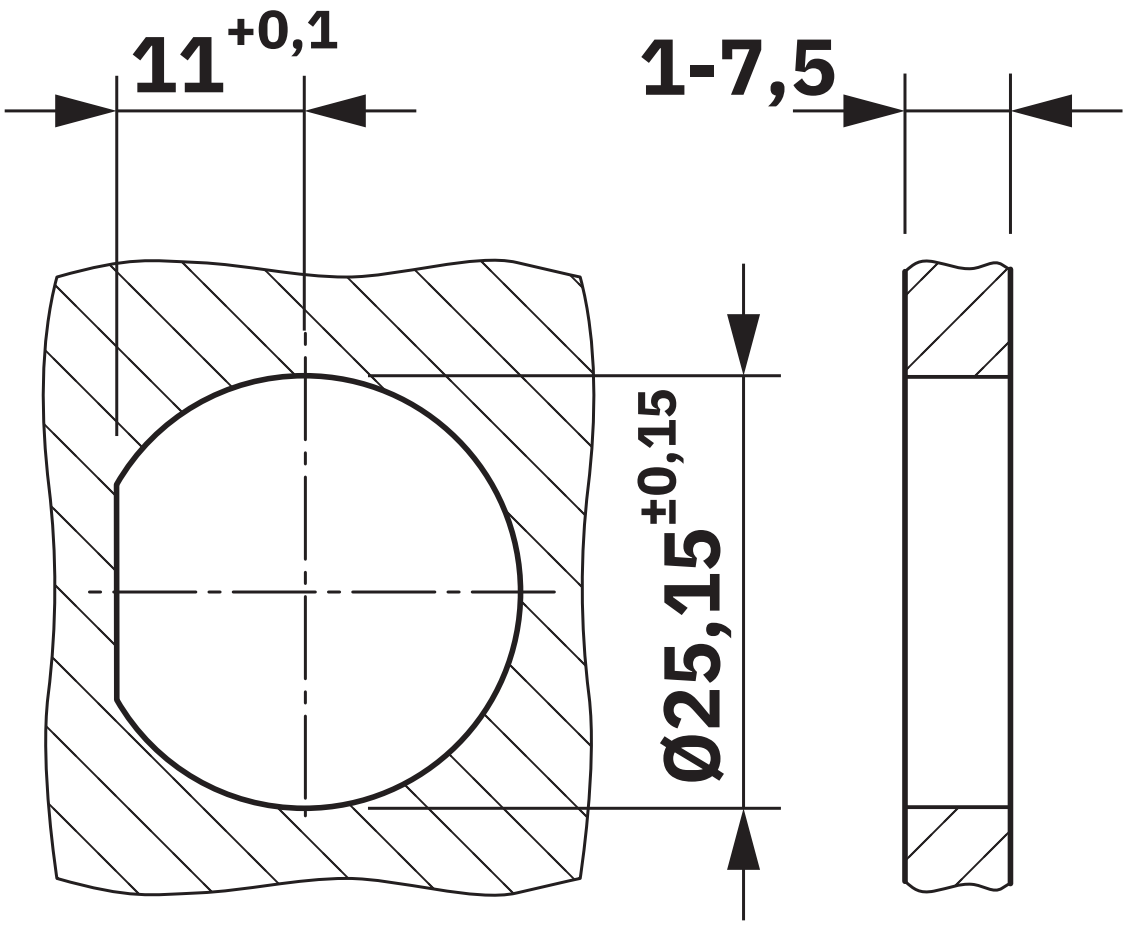

Drilling diagram

Schematic diagram

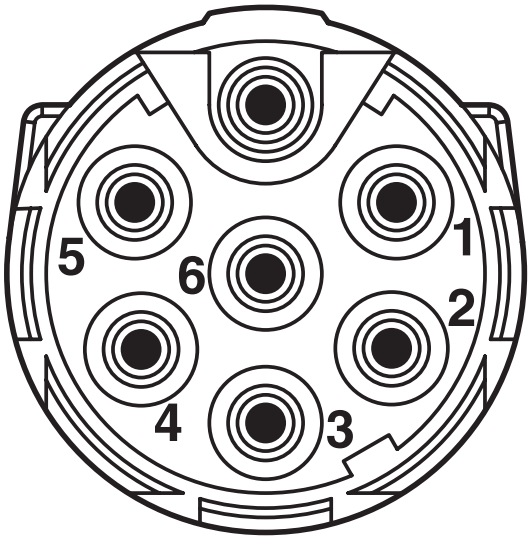

Connector pin assignment

Diagram

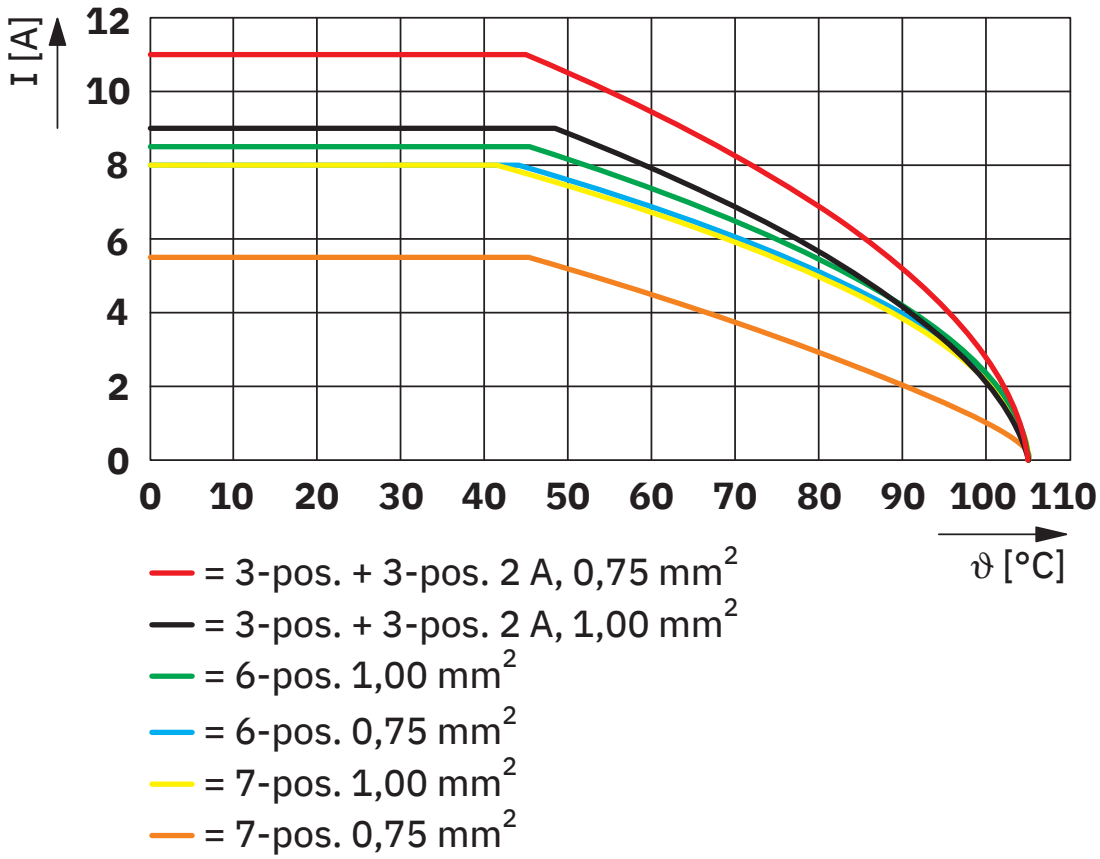

Derating

Approvals

To download certificates, visit the product detail page: https://www.phoenixcontact.com/us/products/1636043

UL Listed
Approval ID: E221474-20250318

	Nominal voltage U_N	Nominal current I_N	Cross section AWG	Cross section mm^2
keine				
	600 V	7 A	18 - 18	18 - 18

cUL Listed
Approval ID: E221474-20250318

	Nominal voltage U_N	Nominal current I_N	Cross section AWG	Cross section mm^2
keine				
	600 V	7 A	18 - 18	-

Classifications

ECLASS

ECLASS-13.0	27440109
ECLASS-15.0	27440109

ETIM

ETIM 10.0	EC003569

Environmental product compliance

EU RoHS

Fulfills EU RoHS substance requirements	Yes, No exemptions

China RoHS

Environment friendly use period (EFUP)	EFUP-E
	No hazardous substances above the limits

EU REACH SVHC

REACH candidate substance (CAS No.)	Triphenyl phosphate(CAS: 115-86-6)
SCIP	e73e7eec-fbb1-47da-acb1-56d0e03e558b

EF3.1 Climate Change

CO2e kg	2.85 kg CO2e

Phoenix Contact 2026 © - all rights reserved
https://www.phoenixcontact.com

Phoenix Contact USA
586 Fulling Mill Road
Middletown, PA 17057, United States
(+717) 944-1300
info@phoenixcon.com