M17-08P1N8A9002S - Coupler connector

1628974

https://www.phoenixcontact.com/us/products/1628974

Please be informed that the data shown in this PDF document is generated from our online catalog. Please find the complete data in the user documentation. Our general terms of use for downloads are valid.



The figure shows the product with assembled crimp contacts. Please order crimp contacts separately.

M17, Coupler connector, application: Signal, series: M17 PRO, straight, shielded: yes, for standard and ONECLICK fast locking system, No. of pos.: 8, contact connection type: Pin, Crimp connection, cable diameter range: 3.5 mm ... 6.5 mm, Item is lead-free in accordance with RoHS II without Exemption 6c (Pb < 0.1 %)

Your advantages

- Solutions with cross-manufacturer compatibility for standard and fast locking systems
- Modern, consistent design for highly convenient operation
- Easy, cost-effective cable assembly: uniform shielding of M17 to M40

Commercial data

Item number	1628974
Packing unit	1 pc
Minimum order quantity	1 pc
Sales key	AB30
Product key	ABRAAG
GTIN	4055626706795
Weight per piece (including packing)	68.9 g
Weight per piece (excluding packing)	52.769 g
Customs tariff number	85366990
Country of origin	DE

Technical data

Notes

Order information:	Order 8 x Ø 1 mm crimp contacts separately

Product properties

Product type	Circular connector (cable-side)
Product family	M17 PRO

Connector

Insulating body

Material (Insulating body)	PA 6.6
Flammability rating according to UL 94	V0
Insertion/withdrawal cycles	100
Connection method	Crimp connection
Contact switching type	Pin
Application	Signal
Number of positions	8
Connection profile	8
Installation height	3000 m
Number (Signal contacts)	8
Contact diameter (Signal contacts)	1 mm
Litz wires Min. cross section (Signal contacts)	0.06 mm²
Litz wires Max. cross section (Signal contacts)	1 mm²
Rated current Contact (Signal contacts)	8 A (for max. connection cross section)
Rated voltage Contact (Signal contacts)	60 V AC/DC
Rated surge voltage	1.5 kV
Overvoltage category	III
Degree of pollution	3

Housing

Type	Coupling housing
Thread type	M17
Design	straight
Type of locking	for standard and ONECLICK fast locking system
Pg screw connection	none
Material (Housing)	GD-Zn
Degree of protection (plugged in)	IP67
	IP68 (2 m / 24 h)

Seal

External cable diameter	3.5 mm ... 6.5 mm

Environmental and real-life conditions

Ambient conditions

Ambient temperature (operation)	-40 °C ... 105 °C (see derating curve)

Drawings

Schematic diagram

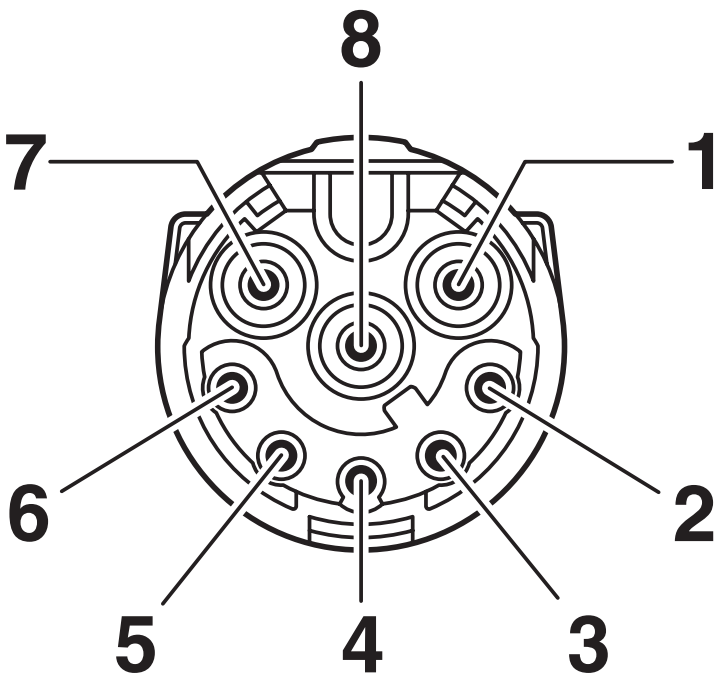

Connector pin assignment

Diagram

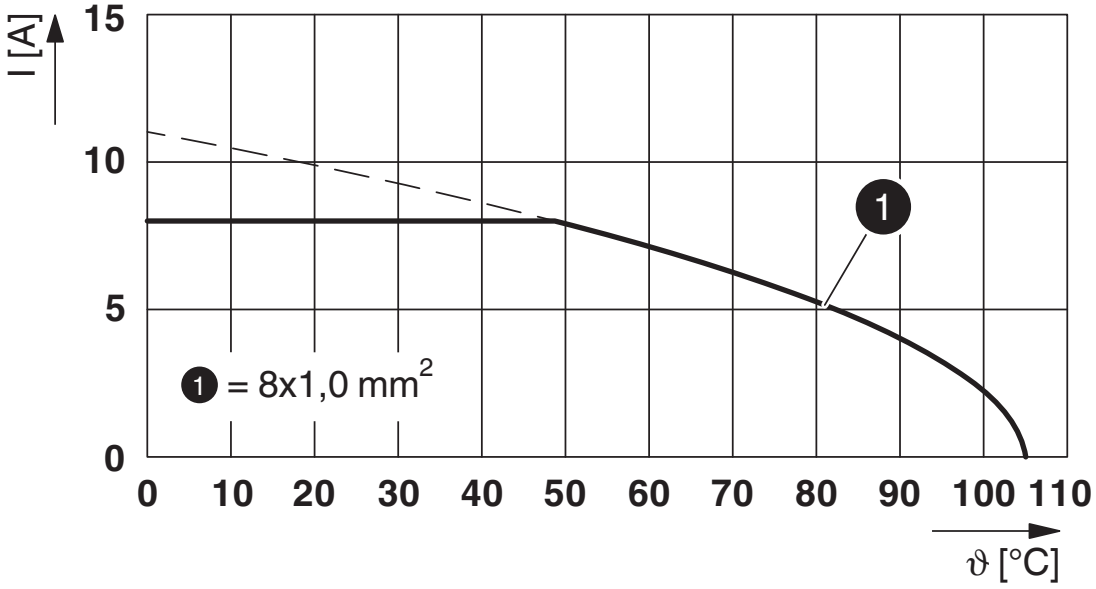

I = current strength, T = ambient temperature

Approvals

To download certificates, visit the product detail page: https://www.phoenixcontact.com/us/products/1628974

cULus Listed
Approval ID: E221474

	Nominal voltage U_N	Nominal current I_N	Cross section AWG	Cross section mm^2
keine				
	60 V	5 A	- 18	-

Classifications

ECLASS

ECLASS-13.0	27440116
ECLASS-15.0	27440116

ETIM

ETIM 10.0	EC002635

UNSPSC

UNSPSC 21.0	39121400

Environmental product compliance

EU RoHS

Fulfills EU RoHS substance requirements	Yes, No exemptions

China RoHS

Environment friendly use period (EFUP)	EFUP-E
	No hazardous substances above the limits

EU REACH SVHC

REACH candidate substance (CAS No.)	No substance above 0.1 wt%

Phoenix Contact 2026 © - all rights reserved
https://www.phoenixcontact.com

Phoenix Contact USA
586 Fulling Mill Road
Middletown, PA 17057, United States
(+717) 944-1300
info@phoenixcon.com