# M17-8ES1N8AA500S - Device connector front mounting

1628502

https://www.phoenixcontact.com/us/products/1628502

Please be informed that the data shown in this PDF document is generated from our online catalog. Please find the complete data in the user documentation. Our general terms of use for downloads are valid.



The figure shows the product with assembled crimp contacts. Please order crimp contacts separately.

M17, Device connector front mounting, application: Power, series: M17 PRO, angled rotatable, shielded: yes, for standard and ONECLICK fast locking system, No. of pos.: 5+3+PE, contact connection type: Socket, Crimp connection, flange dimensions: 26 mm x 26 mm, Item is lead-free in accordance with RoHS II without Exemption 6c (Pb < 0.1 %)

## Your advantages

- Solutions with cross-manufacturer compatibility for standard and fast locking systems
- Modern, consistent design for highly convenient operation
- Crimping connection: vibration- and temperature-resistant assembly
- All housing can be fitted with pin or socket contacts
- Safe use in the field, thanks to high degree of protection

## Commercial data

| | |
|---|---|
| Item number | 1628502 |
| Packing unit | 1 pc |
| Minimum order quantity | 1 pc |
| Sales key | AB30 |
| Product key | ABRBAM |
| GTIN | 4055626707105 |
| Weight per piece (including packing) | 93 g |
| Weight per piece (excluding packing) | 77.058 g |
| Customs tariff number | 85366990 |
| Country of origin | DE |

## Technical data

### Notes

| | |
|---|---|
| Order information: | Order crimp contacts 5 x 0.6 mm, 4 x Ø 1 mm separately |

### Product properties

| | |
|---|---|
| Product type | Circular connectors (device side) |
| Product family | M17 PRO |

### Connector

Insulating body

| | |
|---|---|
| Flammability rating according to UL 94 | V0 |
| Insertion/withdrawal cycles | 100 |
| Connection method | Crimp connection |
| Contact switching type | Socket |
| Application | Power |
| Number of positions | 9 |
| Connection profile | 5+3+PE |
| Installation height | 2000 m |
| Number (Contact group 1) | 4 |
| Contact diameter (Contact group 1) | 1 mm |
| Litz wires Min. cross section (Contact group 1) | 0.06 mm² |
| Litz wires Max. cross section (Contact group 1) | 1 mm² |
| Rated current Contact (Contact group 1) | 14 A (for max. connection cross section) |
| Rated voltage Contact (Contact group 1) | 630 V |
| Rated surge voltage | 6 kV |
| Overvoltage category | III |
| Degree of pollution | 3 |
| Number (Contact group 2) | 5 |
| Contact diameter (Contact group 2) | 0.6 mm |
| Litz wires Max. cross section (Contact group 2) | 0.5 mm² |
| Rated current Contact (Contact group 2) | 3.6 A (for max. connection cross section) |
| Rated voltage Contact (Contact group 2) | 60 V |
| Rated surge voltage | 1.5 kV |
| Overvoltage category | III |
| Degree of pollution | 3 |

Housing

| | |
|---|---|
| Type | Flange housing |
| Thread type | M17 |
| Design | angled rotatable |
| Type of locking | for standard and ONECLICK fast locking system |
| Mounting type | Front mounting/square flange (4x Ø 3.1 mm) |

| | |
|---|---|
| Flange dimensions | 26 mm x 26 mm |
| Housing material | GD-Zn |
| Seal material | FKM |
| Degree of protection (plugged in) | IP67 |
| | IP68 (2 m / 24 h) |

## Environmental and real-life conditions

### Ambient conditions

| | |
|---|---|
| Ambient temperature (operation) | -40 °C ... 105 °C (see derating curve) |

## Drawings

Dimensional drawing

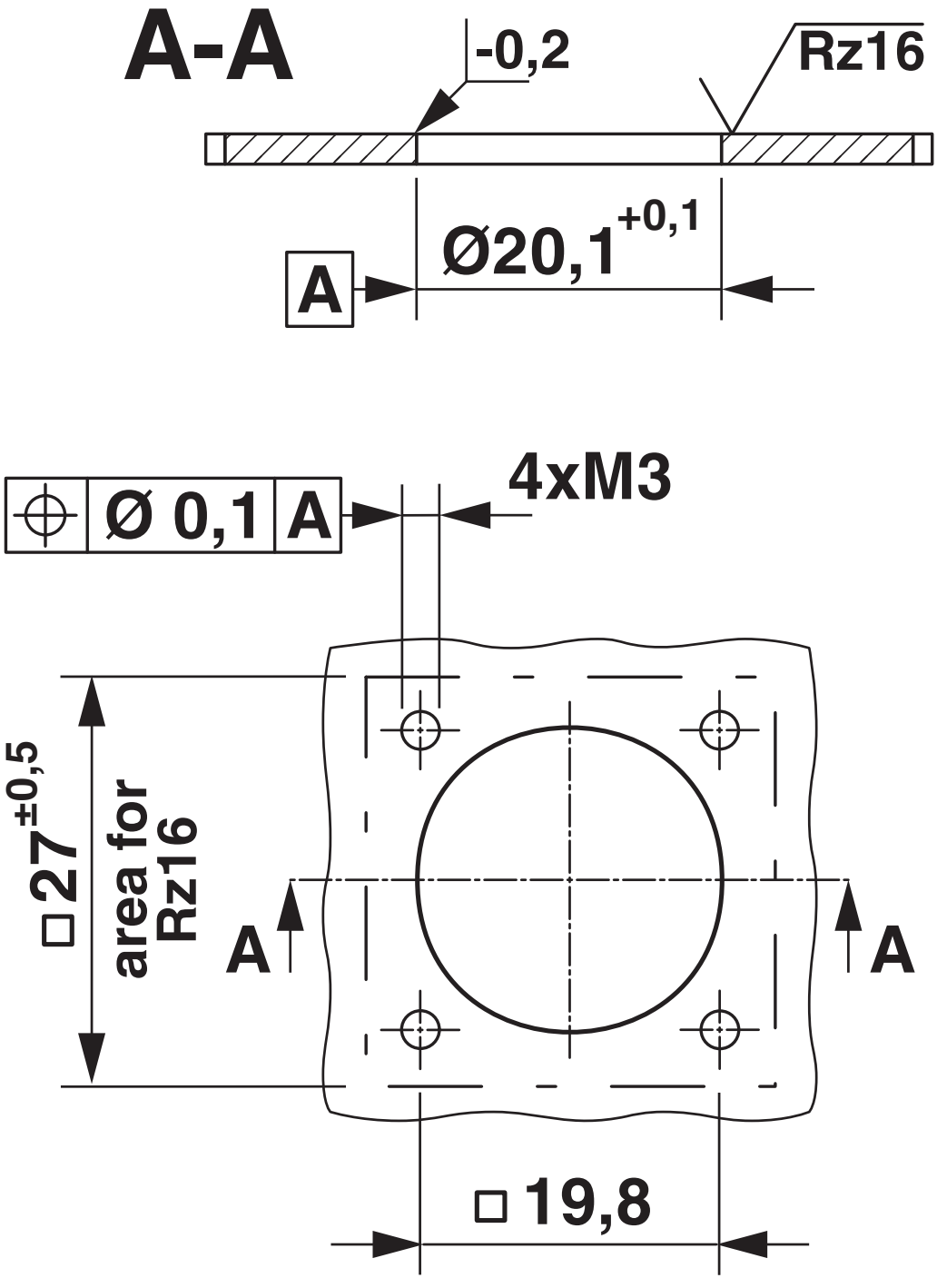


Installation dimensions

Schematic diagram

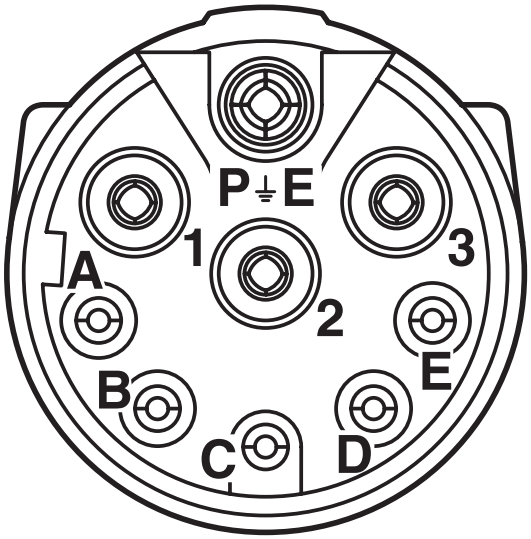


Connector pin assignment

Diagram

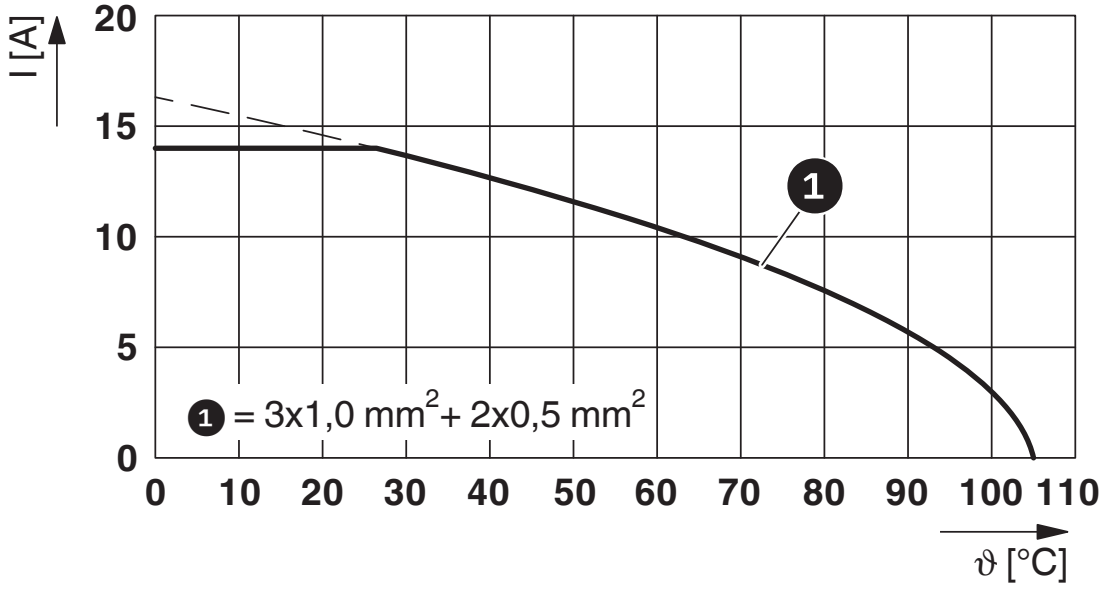


I = current strength, ϑ = ambient temperature, 3x 14 A + 2x 2 A constant

Diagram

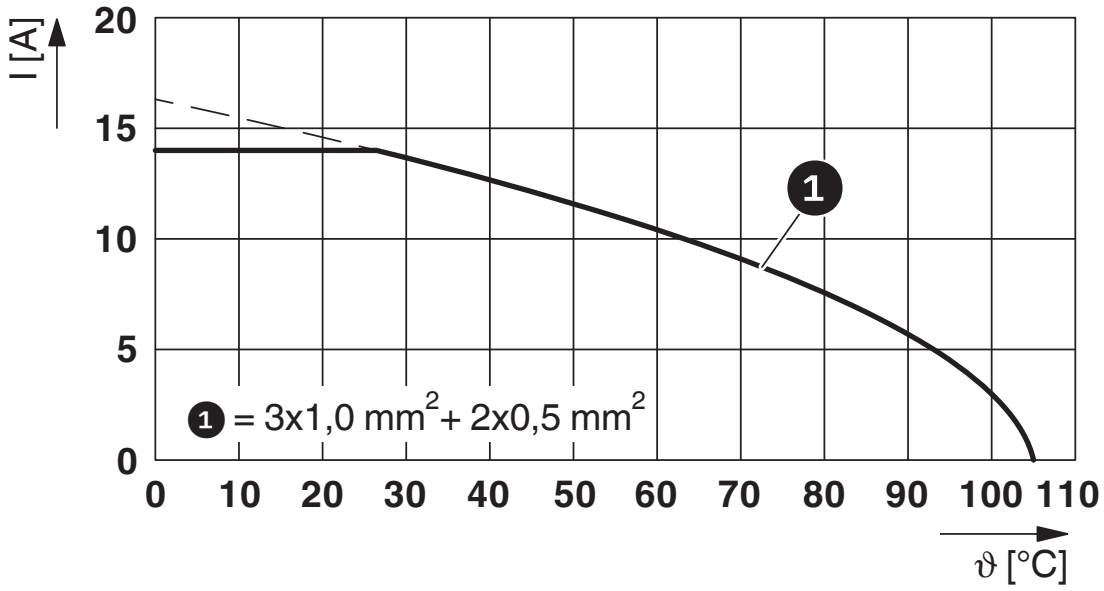


I = current strength, ϑ = ambient temperature, 3x 14 A + 2x 2 A constant

## Approvals

To download certificates, visit the product detail page: https://www.phoenixcontact.com/us/products/1628502

**UL Listed**
Approval ID: E468743

| | Nominal voltage $U_N$ | Nominal current $I_N$ | Cross section AWG | Cross section $mm^2$ |
|---|---|---|---|---|
| keine | | | | |
| Power | 600 V | 10 A | - 18 | 1 |
| Signal | 60 V | 2 A | - 20 | 1 |

**cUL Listed**
Approval ID: E468743

| | Nominal voltage $U_N$ | Nominal current $I_N$ | Cross section AWG | Cross section $mm^2$ |
|---|---|---|---|---|
| keine | | | | |
| Power | 600 V | 8 A | - 18 | - |
| Signal | 60 V | 2 A | - 20 | - |

## Classifications

### ECLASS

| | |
|---|---|
| ECLASS-13.0 | 27440109 |
| ECLASS-15.0 | 27440109 |

### ETIM

| | |
|---|---|
| ETIM 10.0 | EC003569 |

### UNSPSC

| | |
|---|---|
| UNSPSC 21.0 | 39121400 |

## Environmental product compliance

EU RoHS

| | |
|---|---|
| Fulfills EU RoHS substance requirements | Yes, No exemptions |

China RoHS

| | |
|---|---|
| Environment friendly use period (EFUP) | EFUP-E |
| | No hazardous substances above the limits |

EU REACH SVHC

| | |
|---|---|
| REACH candidate substance (CAS No.) | No substance above 0.1 wt% |


Phoenix Contact 2026 © - all rights reserved
https://www.phoenixcontact.com



Phoenix Contact USA
586 Fulling Mill Road
Middletown, PA 17057, United States
(+717) 944-1300
info@phoenixcon.com