SF-7EP1N8A90A5 - Coupler connector

1627035

https://www.phoenixcontact.com/us/products/1627035

Please be informed that the data shown in this PDF document is generated from our online catalog. Please find the complete data in the user documentation. Our general terms of use for downloads are valid.

CRIMP



The figure shows the product with assembled crimp contacts. Please order crimp contacts separately.

Coupler connector, application: Power, straight short, Screw locking mechanism, M23, number of positions: 4+3+PE, contact connection type: Pin, shielded: yes, degree of protection: IP67, cable diameter range: 5.5 mm ... 8.5 mm, number of positions: 8, connection method: Crimp connection, series: SF, this item is expected to be lead-free from Q1 2027 in accordance with RoHS II without exception 6c (Pb < 0.1%), a lead-free alternative is possible on request in advance, This product is in the process of being discontinued. This product must no longer be considered for new projects. Please contact your sales representative for alternatives. Alternative products: 1628784

Your advantages

- Consistent EMC protection for reliable connection solutions in the industrial environment
- Crimping connection: vibration- and temperature-resistant assembly
- Flexible use: reliably connect various cable diameters

Commercial data

Item number	1627035
Packing unit	1 pc
Minimum order quantity	1 pc
Sales key	AB32
Product key	ABRBFG
GTIN	4055626289755
Weight per piece (including packing)	108.9 g
Weight per piece (excluding packing)	93.549 g
Customs tariff number	85366990
Country of origin	DE

Technical data

Notes

Order information:	Order crimp contacts 4 x Ø 1 mm, 4 x Ø 2 mm separately
Note on application	Series SF connectors are not compatible with series M23 PRO and must not be combined.
General	Compatible with mating connectors with SPEEDCON or M23 standard knurled nuts

Product properties

Product type	Circular connector (cable-side)
Series	SF
Application	Power
Number of positions	8
Connection profile	4+3+PE
Shielded	yes
Coding	N
Thread type	M23

Material specifications

Material Housing	Metal
Seal material	FPM

Connection data

Conductor connection

Connection method	Crimp connection

Electrical properties

Contact: Contact group 1

Contact diameter	2 mm
Nominal current I_N	30 A
Nominal voltage U_N	630 V
Overvoltage category	III
Degree of pollution	3
Rated surge voltage	6 kV

Contact: Contact group 2

Contact diameter	1 mm
Nominal current I_N	9 A
Nominal voltage U_N	250 V
Overvoltage category	III
Degree of pollution	3
Rated surge voltage	4 kV

Connector

Type	straight short

Connection 1

Head design	Pin

Cable/line

External cable diameter	5.5 mm ... 8.5 mm

Environmental and real-life conditions

Ambient conditions

Degree of protection	IP67
Ambient temperature (operation)	-40 °C ... 125 °C
Altitude	3000 m

Drawings

Dimensional drawing

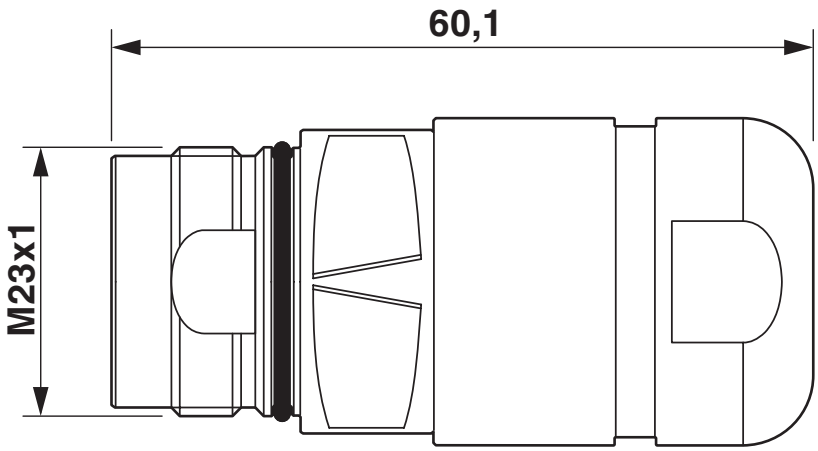

Dimensional drawing

Schematic diagram

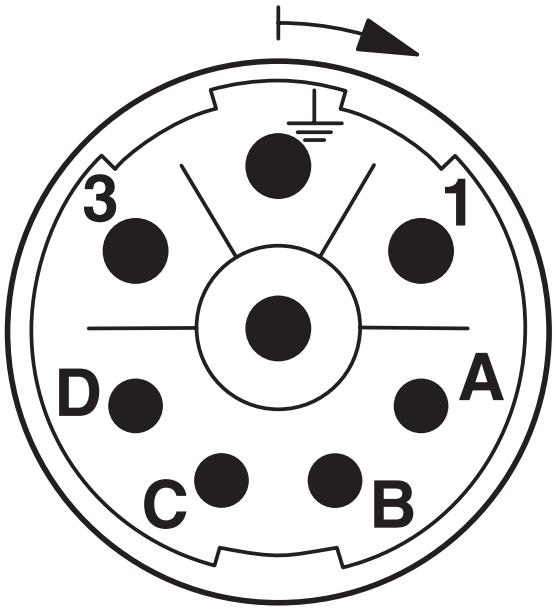

Connector pin assignment

Diagram

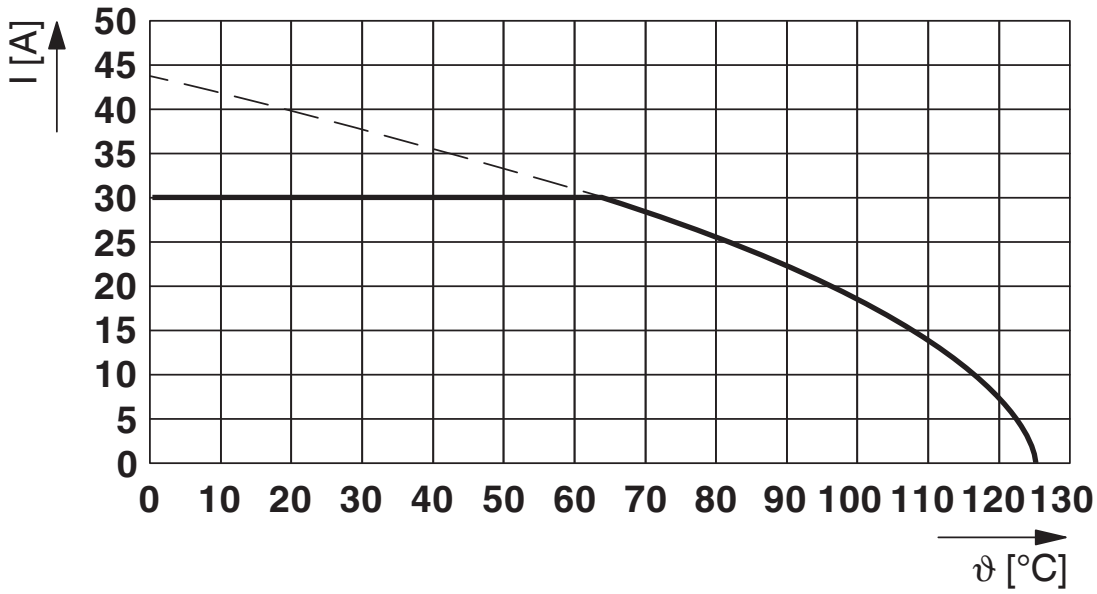

I = current strength, T = ambient temperature

Classifications

ECLASS

ECLASS-13.0	27440116
ECLASS-15.0	27440116

ETIM

ETIM 10.0	EC002635

UNSPSC

UNSPSC 21.0	39121400

Environmental product compliance

EU RoHS

Fulfills EU RoHS substance requirements	Yes
Exemption	6(c)

China RoHS

Environment friendly use period (EFUP)	EFUP-50
	An article-related China RoHS declaration table can be found in the download area for the respective article under "Manufacturer declaration". For all articles with EFUP-E, no China RoHS declaration table issued and required.

EU REACH SVHC

REACH candidate substance (CAS No.)	Lead(CAS: 7439-92-1)
SCIP	68fe1500-9e21-4286-b2a6-ba8386d767a8

Phoenix Contact 2026 © - all rights reserved
https://www.phoenixcontact.com

Phoenix Contact USA
586 Fulling Mill Road
Middletown, PA 17057, United States
(+717) 944-1300
info@phoenixcon.com