EV-T1AC-PARK - Charging connector holder

1624139

https://www.phoenixcontact.com/us/products/1624139

Please be informed that the data shown in this PDF document is generated from our online catalog. Please find the complete data in the user documentation. Our general terms of use for downloads are valid.



CHARX connect, Type 1, Charging connector holder, Accessories, Front mounting, housing: black, for vehicle charging connectors on charging stations (EVSE), SAE J1772

Product description

Retainer for Vehicle Connector as parking position at charging stations for E-Mobility (EVSE)

Commercial data

Item number	1624139
Packing unit	1 pc
Minimum order quantity	1 pc
Sales key	EM01
Product key	XWBDYY
GTIN	4055626241555
Weight per piece (including packing)	116 g
Weight per piece (excluding packing)	72 g
Customs tariff number	39269097
Country of origin	PL

Technical data

Product properties

Product type	Charging connector holder
Product family	CHARX connect
Type	Accessories
Charging standard	Type 1
Charging mode	Mode 3
Customer variations	On request

Material specifications

Color (Housing)	black (9005)
Material (Housing)	Plastic
Flammability rating according to UL 94	V0 ()

Mechanical properties

Securing	With actuation lever
Removal	Lever actuation and removal

Environmental and real-life conditions

Ambient conditions

Degree of protection	IP54 (plugged in)
Ambient temperature (operation)	-30 °C ... 50 °C
Ambient temperature (storage/transport)	-40 °C ... 80 °C

Standards and regulations

Standards

Standards/regulations	SAE J1772

Mounting

Mounting type Charging connector holder	Front mounting (0° ... 45° frontal inclination possible)
Mounting hole diameter	6.00 mm (ø)

Drawings

Dimensional drawing

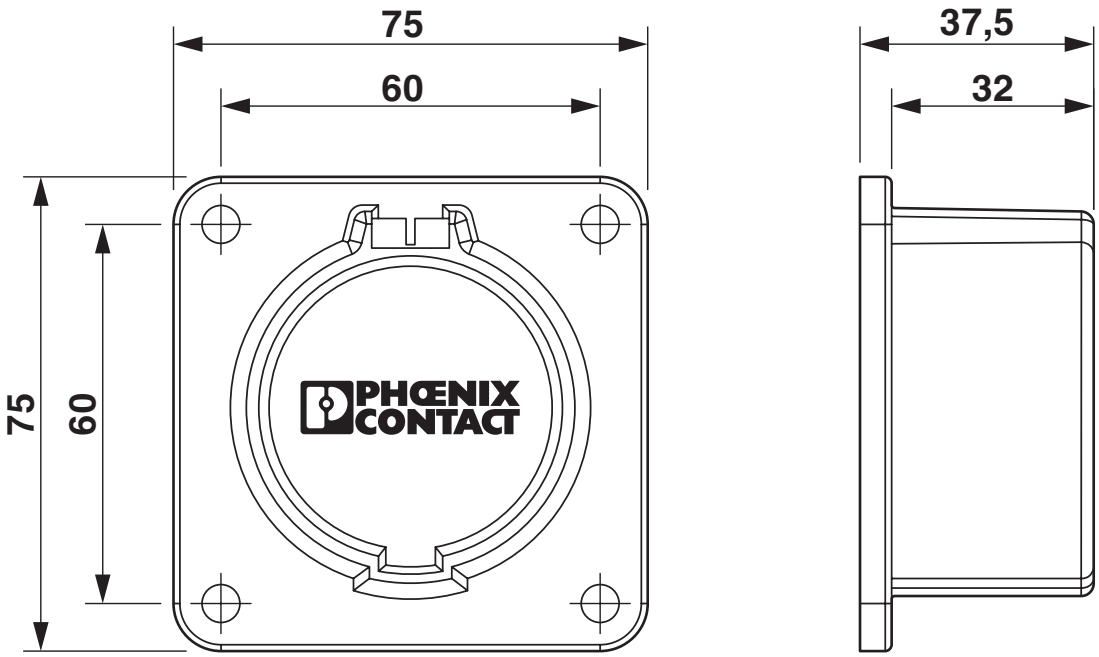

Dimensional drawing

Classifications

ECLASS

ECLASS-13.0	27144792
ECLASS-15.0	27144792

ETIM

ETIM 10.0	EC002884

UNSPSC

UNSPSC 21.0	39121500

Environmental product compliance

EU RoHS

Fulfills EU RoHS substance requirements	Yes, No exemptions

China RoHS

Environment friendly use period (EFUP)	EFUP-E
	No hazardous substances above the limits

EU REACH SVHC

REACH candidate substance (CAS No.)	No substance above 0.1 wt%

Phoenix Contact 2026 © - all rights reserved
https://www.phoenixcontact.com

Phoenix Contact USA
586 Fulling Mill Road
Middletown, PA 17057, United States
(+717) 944-1300
info@phoenixcon.com