CA-16P1N126L00 - Device connector front mounting

1624053

https://www.phoenixcontact.com/us/products/1624053

Please be informed that the data shown in this PDF document is generated from our online catalog. Please find the complete data in the user documentation. Our general terms of use for downloads are valid.



The figure shows the 12-pos. product version

M23, Device connector front mounting, application: Signal, series: CA, straight, shielded: yes, for standard and SPEEDCON interlock, No. of pos.: 16, Direction of rotation: Standard, contact connection type: Pin, Solder connection, Axial seal, coding: N. This product is in the process of being discontinued. This product must no longer be considered for new projects. Please contact your sales representative for alternatives.

Your advantages

- Safe use in the field, thanks to high degree of protection
- Connector for flexible on-site assembly
- Consistent EMC protection for reliable transmission of signals
- Solder connection: proven connection technology for various litz wires

Commercial data

Item number	1624053
Packing unit	1 pc
Minimum order quantity	1 pc
Note	Made to order (non-returnable)
Sales key	AB31
Product key	ABRAEL
GTIN	4055626227740
Weight per piece (including packing)	42.3 g
Weight per piece (excluding packing)	35.329 g
Customs tariff number	85366990
Country of origin	DE

Technical data

Product properties

Product type	Circular connectors (device side)

Material specifications

Flammability rating according to UL 94	V0

Connector

Insulating body

Coding	N
Material (Insulating body)	PBT
Material (Contact)	CuZn
Material (Contact surface)	Ni/Au
Insertion/withdrawal cycles	100
Connection method	Solder connection
Contact switching type	Pin
Application	Signal
Number of positions	16
Direction of rotation	Standard
Connection profile	16
Number (Contact group 1)	0
Rated voltage Contact (Contact group 1)	48 V AC
	74 V DC
Rated surge voltage	1.5 kV
Overvoltage category	III
Degree of pollution	3
Number (Contact group 2)	16
Contact diameter (Contact group 2)	1 mm
Litz wires Max. cross section (Contact group 2)	1 mm²
Rated current Contact (Contact group 2)	8 A

Housing

Thread type	M23
Design	straight
Type of locking	for standard and SPEEDCON interlock
Pg screw connection	none
Mounting type	Front mounting (M20 x 1,5)
Assembly note	Central fastening
Housing material	Turned parts: copper zinc alloy (CuZn), die-cast parts: zinc (GD-Zn)
Degree of protection (plugged in)	IP67
Seal for the device	Axial seal

Drawings

Dimensional drawing

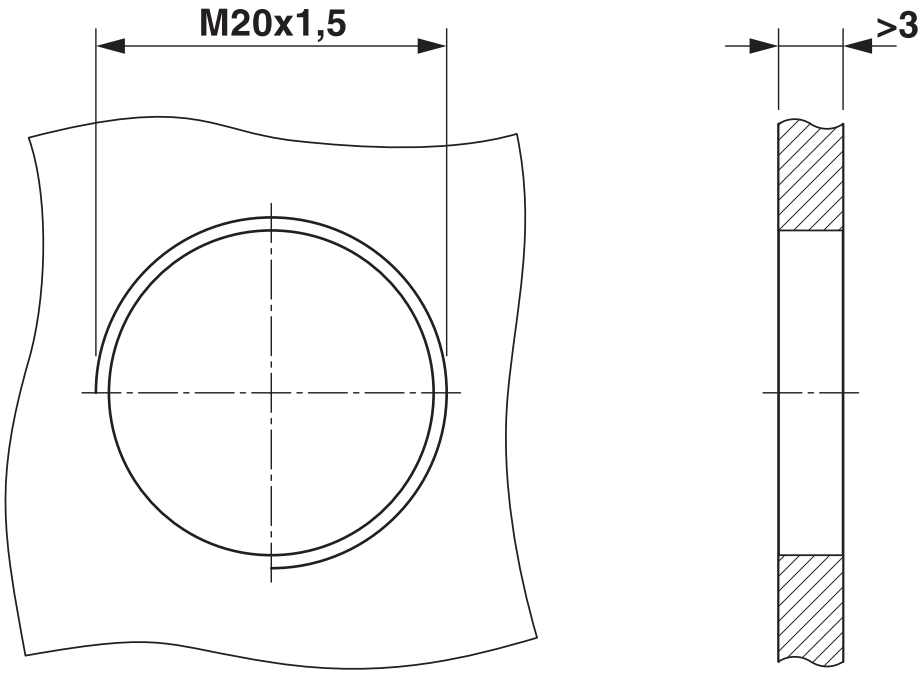

Installation dimensions

Schematic diagram

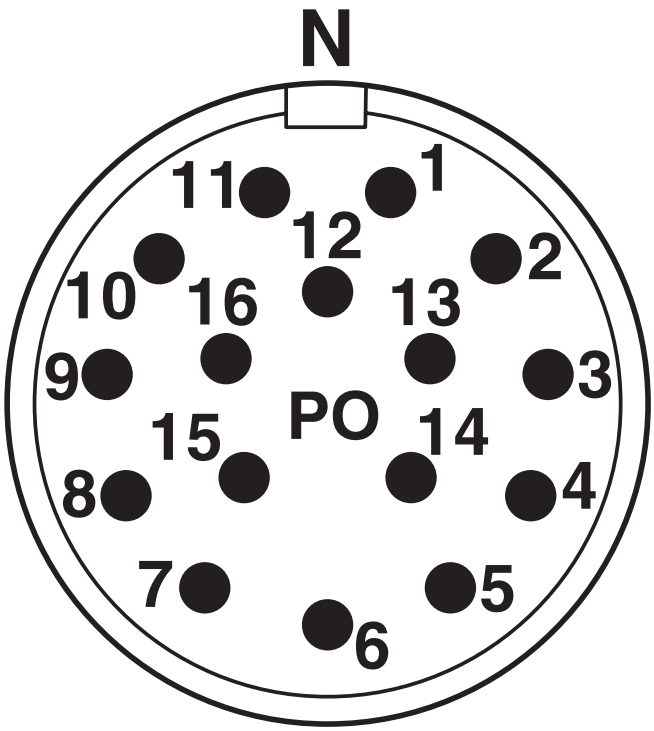

Connector pin assignment

Approvals

To download certificates, visit the product detail page: https://www.phoenixcontact.com/us/products/1624053

cUL Recognized
Approval ID: E335019-20141210

	Nominal voltage U_N	Nominal current I_N	Cross section AWG	Cross section mm^2
keine				
	48 V	5 A	18	-

UL Recognized
Approval ID: E335019-20141210

	Nominal voltage U_N	Nominal current I_N	Cross section AWG	Cross section mm^2
keine				
	48 V	8 A	18	-

Classifications

ECLASS

ECLASS-13.0	27440109
ECLASS-15.0	27440109

ETIM

ETIM 10.0	EC003569

UNSPSC

UNSPSC 21.0	39121400

Environmental product compliance

EU RoHS

Fulfills EU RoHS substance requirements	Yes
Exemption	6(c)

China RoHS

Environment friendly use period (EFUP)	EFUP-50
	An article-related China RoHS declaration table can be found in the download area for the respective article under "Manufacturer declaration". For all articles with EFUP-E, no China RoHS declaration table issued and required.

EU REACH SVHC

REACH candidate substance (CAS No.)	Lead(CAS: 7439-92-1)
SCIP	930e18e6-ad0b-41d2-9e02-50cec410efeb

Phoenix Contact 2026 © - all rights reserved
https://www.phoenixcontact.com

Phoenix Contact USA
586 Fulling Mill Road
Middletown, PA 17057, United States
(+717) 944-1300
info@phoenixcon.com