# CA-09S1N126L00 - Device connector front mounting

1624049

https://www.phoenixcontact.com/us/products/1624049

Please be informed that the data shown in this PDF document is generated from our online catalog. Please find the complete data in the user documentation. Our general terms of use for downloads are valid.



The figure shows the 6-pos. product version

M23, Device connector front mounting, application: Signal, series: CA, straight, shielded: yes, for standard and SPEEDCON interlock, No. of pos.: 8+1, Direction of rotation: Standard, contact connection type: Socket, Solder connection, Axial seal, coding: N. This product is in the process of being discontinued. This product must no longer be considered for new projects. Please contact your sales representative for alternatives.

## Your advantages

- Safe use in the field, thanks to high degree of protection
- Connector for flexible on-site assembly
- Consistent EMC protection for reliable transmission of signals
- Solder connection: proven connection technology for various litz wires

## Commercial data

| | |
|---|---|
| Item number | 1624049 |
| Packing unit | 1 pc |
| Minimum order quantity | 1 pc |
| Note | Made to order (non-returnable) |
| Sales key | AB31 |
| Product key | ABRAEL |
| GTIN | 4055626227702 |
| Weight per piece (including packing) | 39.8 g |
| Weight per piece (excluding packing) | 32.162 g |
| Customs tariff number | 85366990 |
| Country of origin | DE |

## Technical data

### Product properties

| | |
|---|---|
| Product type | Circular connectors (device side) |

### Material specifications

| | |
|---|---|
| Flammability rating according to UL 94 | V0 |

### Connector

Insulating body

| | |
|---|---|
| Coding | N |
| Material (Insulating body) | PBT |
| Material (Contact) | CuZn |
| Material (Contact surface) | Ni/Au |
| Insertion/withdrawal cycles | 100 |
| Connection method | Solder connection |
| Contact switching type | Socket |
| Application | Signal |
| Number of positions | 9 |
| Direction of rotation | Standard |
| Connection profile | 8+1 |
| Number (Contact group 1) | 1 |
| Contact diameter (Contact group 1) | 2 mm |
| Litz wires Max. cross section (Contact group 1) | 2.5 mm² |
| Rated current Contact (Contact group 1) | 20 A (for max. connection cross section) |
| Rated voltage Contact (Contact group 1) | 48 V AC |
| | 74 V DC |
| Rated surge voltage | 1.5 kV |
| Overvoltage category | III |
| Degree of pollution | 3 |
| Number (Contact group 2) | 8 |
| Contact diameter (Contact group 2) | 1 mm |
| Litz wires Max. cross section (Contact group 2) | 1 mm² |
| Rated current Contact (Contact group 2) | 8 A |

Housing

| | |
|---|---|
| Thread type | M23 |
| Design | straight |
| Type of locking | for standard and SPEEDCON interlock |
| Pg screw connection | none |
| Mounting type | Front mounting (M20 x 1,5) |
| Assembly note | Central fastening |
| Housing material | Turned parts: copper zinc alloy (CuZn), die-cast parts: zinc (GD-Zn) |

| | |
|---|---|
| Degree of protection (plugged in) | IP67 |
| Seal for the device | Axial seal |

## Drawings

Dimensional drawing

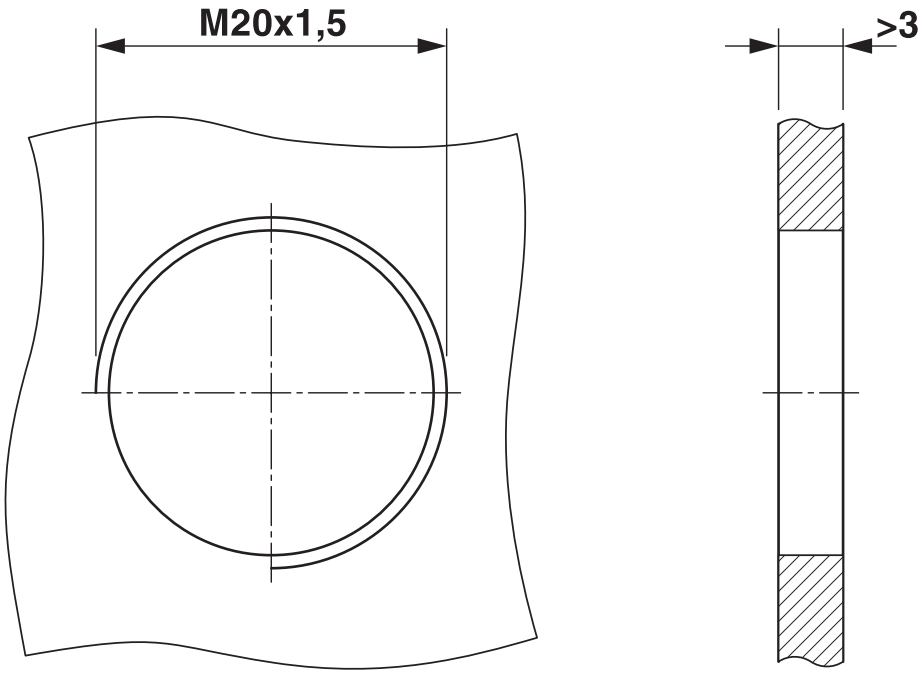


Installation dimensions

Schematic diagram

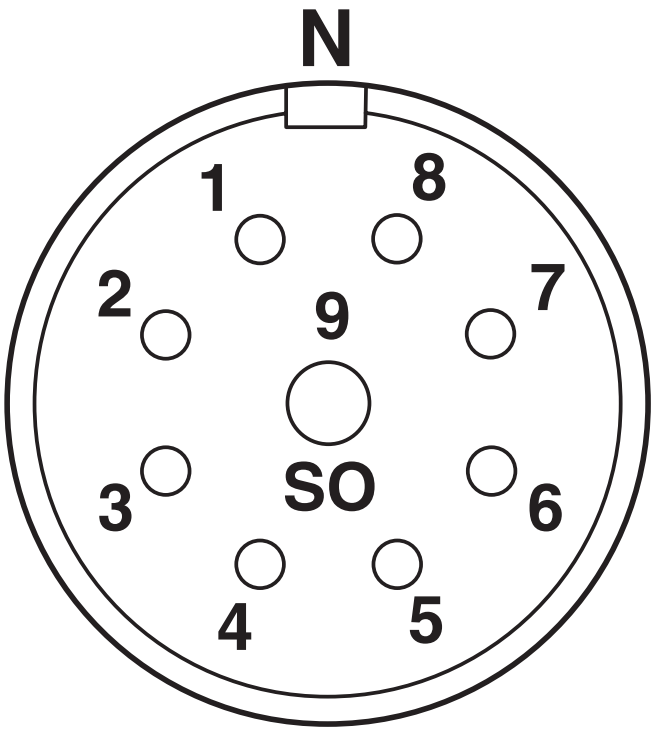


Connector pin assignment

## Approvals

To download certificates, visit the product detail page: https://www.phoenixcontact.com/us/products/1624049

**cUL Recognized**
Approval ID: E335019-20141210

| | Nominal voltage $U_N$ | Nominal current $I_N$ | Cross section AWG | Cross section $mm^2$ |
|---|---|---|---|---|
| keine | | | | |
| Power | 48 V | 12 A | 14 | - |
| Signal | 48 V | 6 A | 18 | - |

**UL Recognized**
Approval ID: E335019-20141210

| | Nominal voltage $U_N$ | Nominal current $I_N$ | Cross section AWG | Cross section $mm^2$ |
|---|---|---|---|---|
| keine | | | | |
| Power | 48 V | 20 A | 14 | - |
| Signal | 48 V | 8 A | 18 | - |

## Classifications

### ECLASS

| | |
|---|---|
| ECLASS-13.0 | 27440109 |
| ECLASS-15.0 | 27440109 |

### ETIM

| | |
|---|---|
| ETIM 10.0 | EC003569 |

### UNSPSC

| | |
|---|---|
| UNSPSC 21.0 | 39121400 |

## Environmental product compliance

EU RoHS

| | |
|---|---|
| Fulfills EU RoHS substance requirements | Yes |
| Exemption | 6(c) |

China RoHS

| | |
|---|---|
| Environment friendly use period (EFUP) | EFUP-50 |
| | An article-related China RoHS declaration table can be found in the download area for the respective article under "Manufacturer declaration". For all articles with EFUP-E, no China RoHS declaration table issued and required. |

EU REACH SVHC

| | |
|---|---|
| REACH candidate substance (CAS No.) | Lead(CAS: 7439-92-1) |
| SCIP | cfdee72b-de81-4378-87c2-97b1eb021d20 |


Phoenix Contact 2026 © - all rights reserved
https://www.phoenixcontact.com



Phoenix Contact USA
586 Fulling Mill Road
Middletown, PA 17057, United States
(+717) 944-1300
info@phoenixcon.com