SB-8ESSD8AWT00S - Device connector front mounting

1623726

https://www.phoenixcontact.com/us/products/1623726

Please be informed that the data shown in this PDF document is generated from our online catalog. Please find the complete data in the user documentation. Our general terms of use for downloads are valid.



The figure shows the product with assembled crimp contacts. Please order crimp contacts separately.

M40, Device connector front mounting, application: Hybrid, series: SB, straight, shielded: yes, for standard and SPEEDCON interlock, No. of pos.: 8+4+PE, contact connection type: Socket, Crimp connection, Axial O-ring, flange dimensions: 40 mm x 40 mm, coding: Signal, coding 2, Item is lead-free in accordance with RoHS II without Exemption 6c (Pb < 0.1 %)

Your advantages

- All housing can be fitted with pin or socket contacts
- A total of eight contacts are available for signal transmission
- Mechanical coding reliably prevents incorrect connections
- Safe use in the field, thanks to high degree of protection
- Consistent EMC protection for reliable connection solutions in the industrial environment
- Consistent EMC protection for reliable connection solutions in the industrial environment

Commercial data

Item number	1623726
Packing unit	1 pc
Minimum order quantity	1 pc
Note	Made to order (non-returnable)
Sales key	AB33
Product key	ABRCEL
GTIN	4055626195117
Weight per piece (including packing)	205.3 g
Weight per piece (excluding packing)	135.925 g
Customs tariff number	85366990
Country of origin	DE

Technical data

Notes

Order information:	Crimp contacts, 8 x Ø 1 mm, 5 x Ø 3.6 mm, order separately

Product properties

Product type	Circular connectors (device side)

Connector

Insulating body

Protection against electric shock	IEC 61984
Coding	Signal, coding 2
Connection method	Crimp connection
Contact switching type	Socket
Application	Hybrid
Number of positions	13
Connection profile	8+4+PE
Installation height	2000 m (4000 m at 300 V system voltage in accordance with DIN EN 606664-1)
Number (Contact group 1)	5
Contact diameter (Contact group 1)	3.6 mm
Litz wires Min. cross section (Contact group 1)	2.5 mm²
Litz wires Max. cross section (Contact group 1)	16 mm²
Rated current Contact (Contact group 1)	70 A (for max. connection cross section)
Rated voltage Contact (Contact group 1)	630 V AC (Overvoltage category III/3)
	850 V DC (Overvoltage category II/3)
Rated surge voltage	6 kV
Overvoltage category	III
Degree of pollution	3
Number (Contact group 2)	4
Contact diameter (Contact group 2)	0.8 mm
Litz wires Max. cross section (Contact group 2)	0.5 mm²
Rated current Contact (Contact group 2)	8 A (for max. connection cross section)
Rated voltage Contact (Contact group 2)	50 V AC/DC (Contact 5 ... 8)
Rated surge voltage	1.5 kV
Overvoltage category	II, III
Degree of pollution	3
Number (Contact group 3)	4
Contact diameter (Contact group 3)	1 mm
Litz wires Max. cross section (Contact group 3)	1.5 mm²
Rated current Contact (Contact group 3)	8 A (for max. connection cross section)
Rated voltage Contact (Contact group 3)	500 V AC/DC (Contact 1 ... 4)
Rated surge voltage	6 kV

Overvoltage category	III
Degree of pollution	3

Housing

Type	Flange housing
Thread type	M40
Design	straight
Type of locking	for standard and SPEEDCON interlock
Pg screw connection	none
Mounting type	Front mounting/square flange (4x Ø 4,2 mm)
Flange dimensions	40 mm x 40 mm
Housing material	Turned parts: copper zinc alloy (CuZn), die-cast parts: zinc (GD-Zn)
Material for screw connection	CuZn
Degree of protection (plugged in)	IP68/IP69K
Seal for the device	Axial O-ring

Environmental and real-life conditions

Ambient conditions

Ambient temperature (operation)	-40 °C ... 115 °C (see derating curve)

Drawings

Dimensional drawing

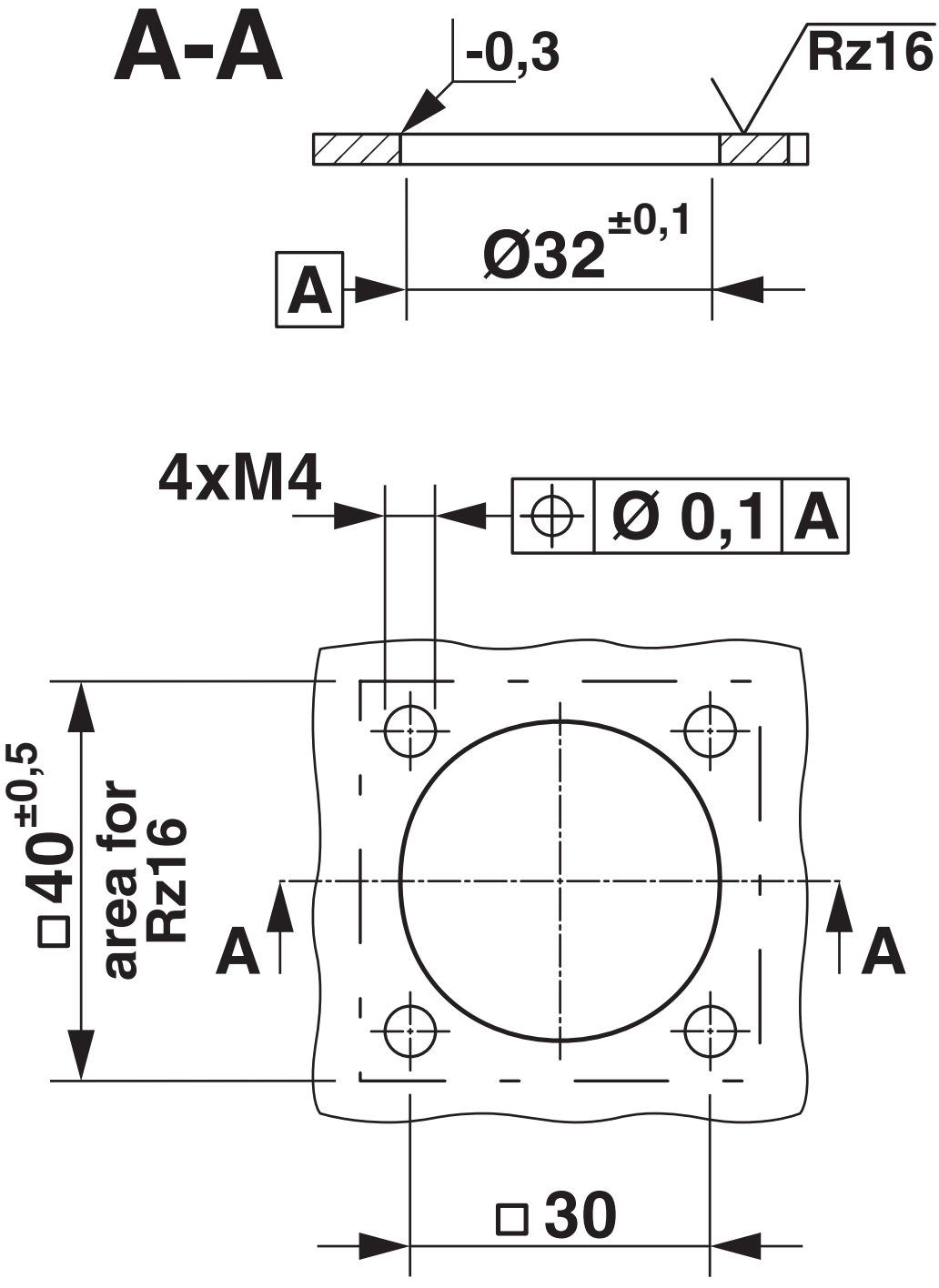

Installation dimensions

Schematic diagram

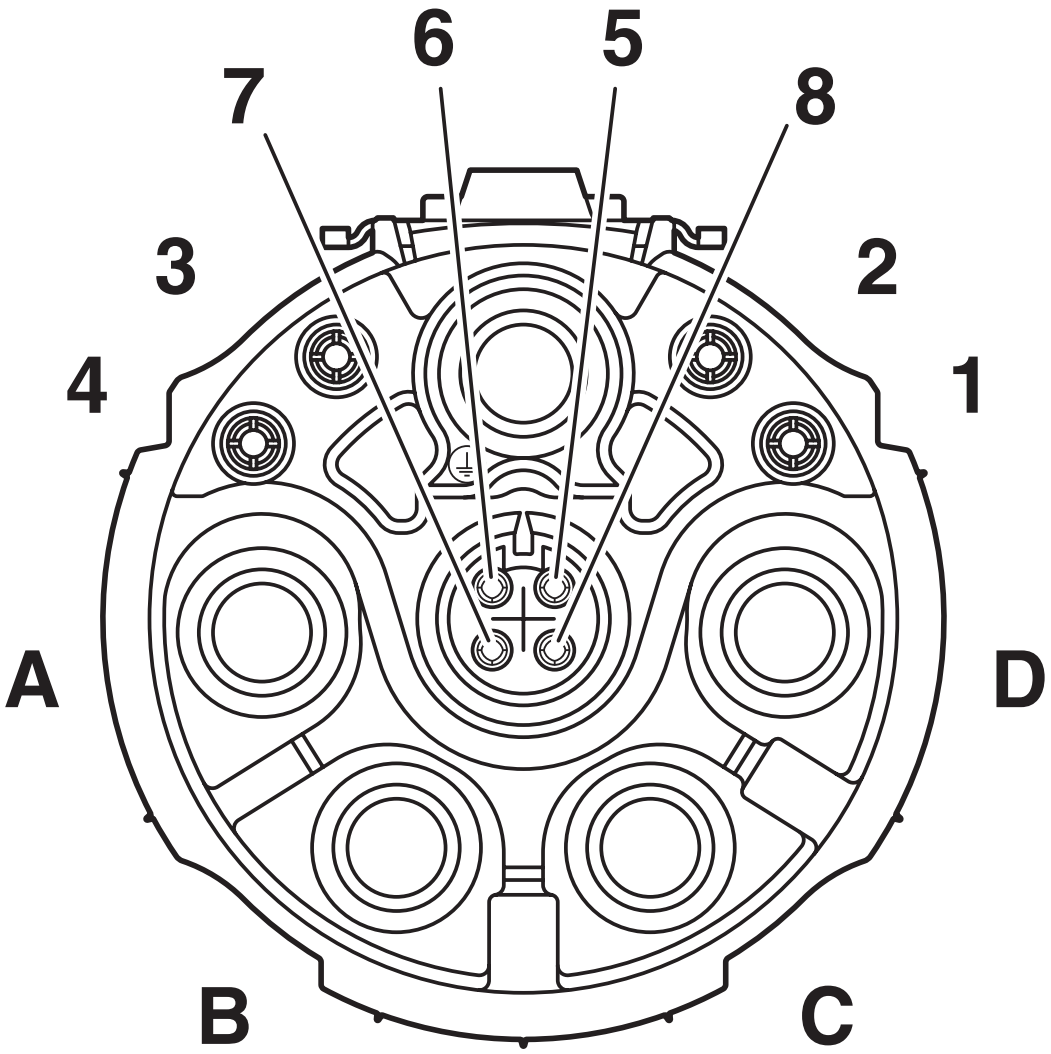

Pin assignment of socket signal, DC coding

Diagram

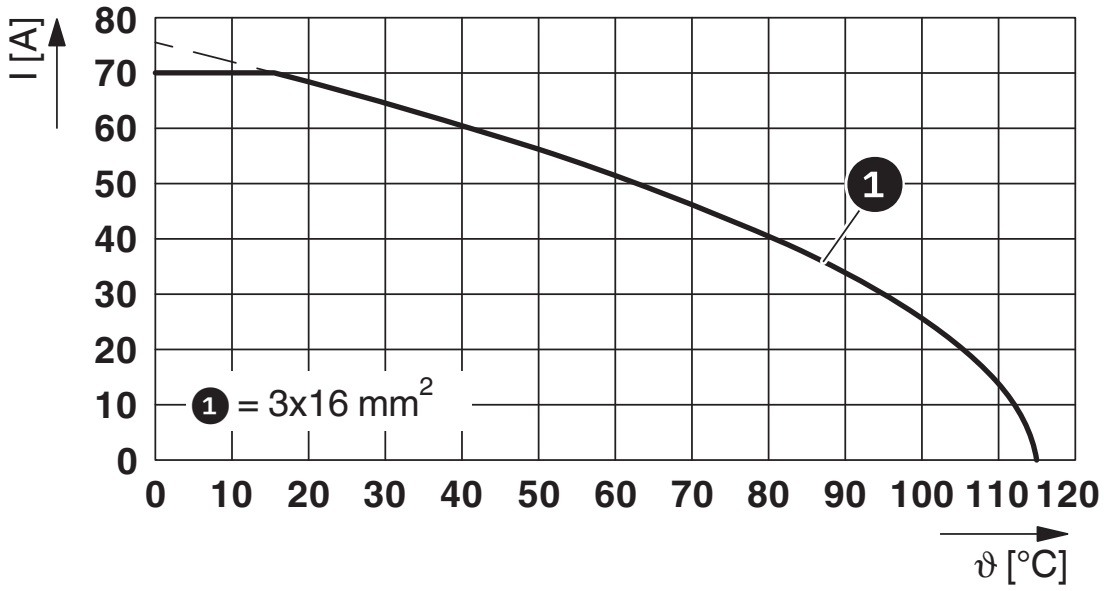

I = current strength, ϑ = ambient temperature, power contacts A–C: 3x up to 70 A, signal contacts: 4x 2 A constant, data contacts: no load

Diagram

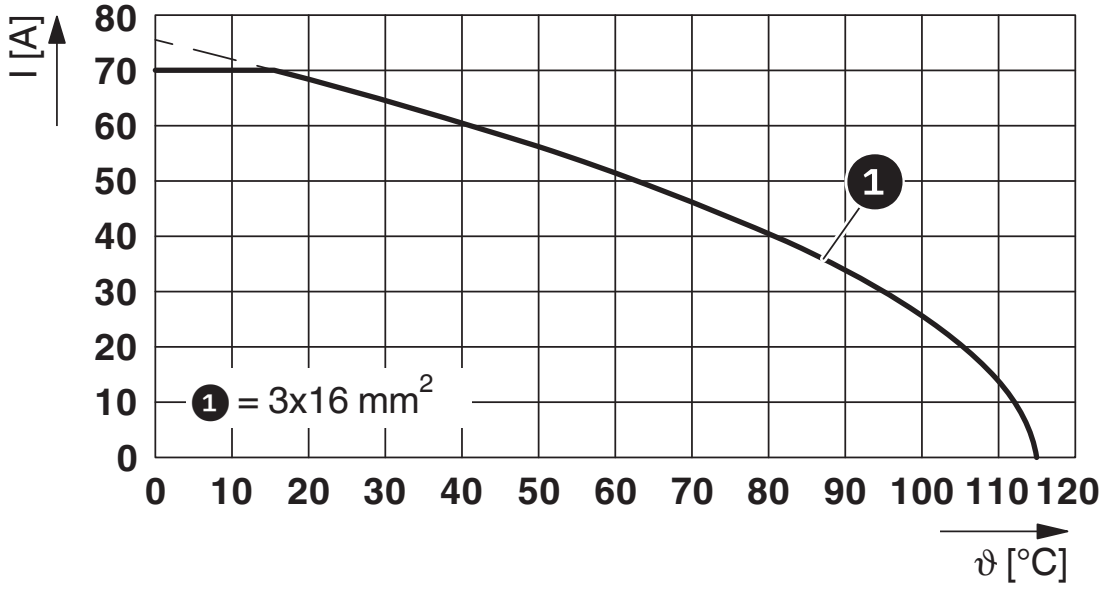

Diagram

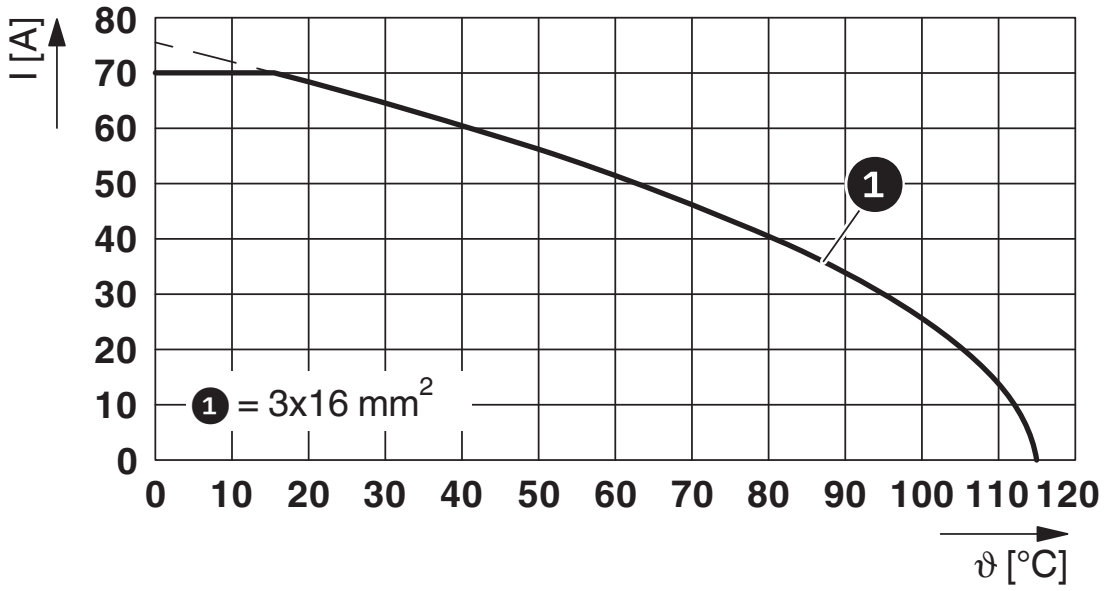
I [A]
80
70
60
50
40
30
20
10
0
1
1 = 3x16 mm²
0 10 20 30 40 50 60 70 80 90 100 110 120
ϑ [°C]

Approvals

To download certificates, visit the product detail page: https://www.phoenixcontact.com/us/products/1623726

cUL Recognized
Approval ID: E153698-20190718

	Nominal voltage U_N	Nominal current I_N	Cross section AWG	Cross section mm^2
keine				
Power	600 V	24 A	6	-
Signal	500 V	4 A	1,5	-
Data	50 V	1 A	0,34	-

UL Recognized
Approval ID: E153698-20190718

	Nominal voltage U_N	Nominal current I_N	Cross section AWG	Cross section mm^2
keine				
Power	600 V	32 A	6	-
Signal	500 V	4 A	1,5	-
Data	50 V	1 A	0,34	-

Classifications

ECLASS

ECLASS-13.0	27440109
ECLASS-15.0	27440109

ETIM

ETIM 10.0	EC003569

UNSPSC

UNSPSC 21.0	39121400

Environmental product compliance

EU RoHS

Fulfills EU RoHS substance requirements	Yes, No exemptions

China RoHS

Environment friendly use period (EFUP)	EFUP-E
	No hazardous substances above the limits

EU REACH SVHC

REACH candidate substance (CAS No.)	No substance above 0.1 wt%

Phoenix Contact 2026 © - all rights reserved
https://www.phoenixcontact.com

Phoenix Contact USA
586 Fulling Mill Road
Middletown, PA 17057, United States
(+717) 944-1300
info@phoenixcon.com