ST-7EP1N8ACK03S - Front panel feed-through

1618790

https://www.phoenixcontact.com/us/products/1618790

Please be informed that the data shown in this PDF document is generated from our online catalog. Please find the complete data in the user documentation. Our general terms of use for downloads are valid.

CRIMP



Front panel feed-through, application: Power, straight, SPEEDCON, M17, number of positions: 7+PE, contact connection type: Pin, Flat gasket, shielded: yes, flange dimensions: 25.75 mm x 25.75 mm, cable diameter range: 5 mm ... 9 mm, number of positions: 8, connection method: Crimp connection, series: ST, This product is in the process of being discontinued. This product must no longer be considered for new projects. Please contact your sales representative for alternatives.

Your advantages

- Reduced size: ideal for compact devices
- Consistent EMC protection for reliable connection solutions in the industrial environment
- Crimping connection: vibration- and temperature-resistant assembly
- Flexible use: reliably connect various cable diameters
- User-specific, suitable for front and rear mounting

Commercial data

Item number	1618790
Packing unit	1 pc
Minimum order quantity	1 pc
Note	Made to order (non-returnable)
Sales key	AB38
Product key	ABRBEJ
GTIN	4046356817417
Weight per piece (including packing)	45.2 g
Weight per piece (excluding packing)	43.016 g
Customs tariff number	85366990
Country of origin	DE

Technical data

Notes

Order information:	Order crimp contacts Ø 1 mm separately

Safety note

Safety note	• WARNING: Commission properly functioning products only. The products must be regularly inspected for damage. Decommission defective products immediately. Replace damaged products. Repairs are not possible.

Mounting

Mounting type	Front/rear mounting (4x Ø 3.2 mm)

Product properties

Product type	Circular connectors (device side)
Series	ST
Application	Power
Number of positions	8
Connection profile	7+PE
Shielded	yes
Coding	N
Thread type	M17

Dimensions

Housing

Flange dimensions	25.75 mm x 25.75 mm

Electrical properties

Contact: Contact group 1

Contact diameter	1 mm
Nominal current I_N	14 A
Nominal voltage U_N	630 V
Overvoltage category	III
Degree of pollution	3
Rated surge voltage	6 kV

Contact: Contact group 2

Contact diameter	1 mm
Nominal current I_N	14 A
Nominal voltage U_N	630 V

Connection data

Conductor connection

Connection method	Crimp connection
Contact connection type	Pin

Connector

Type	straight
Direction of rotation	Standard

Cable/line

External cable diameter	5 mm ... 9 mm

Environmental and real-life conditions

Ambient conditions

Degree of protection	IP67
Ambient temperature (operation)	-40 °C ... 125 °C
Altitude	2000 m

Drawings

Dimensional drawing

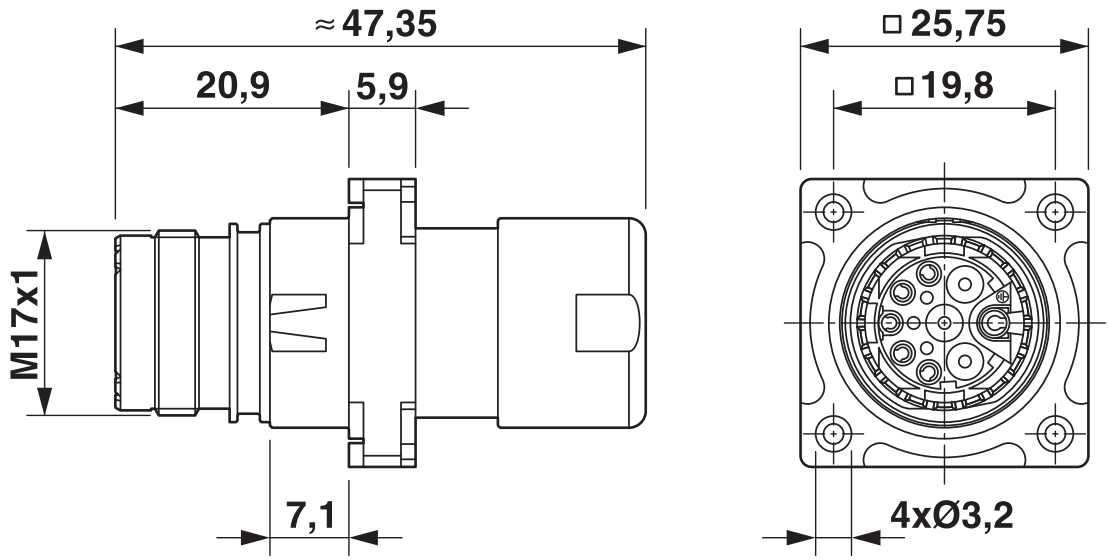

Dimensional drawing

Dimensional drawing

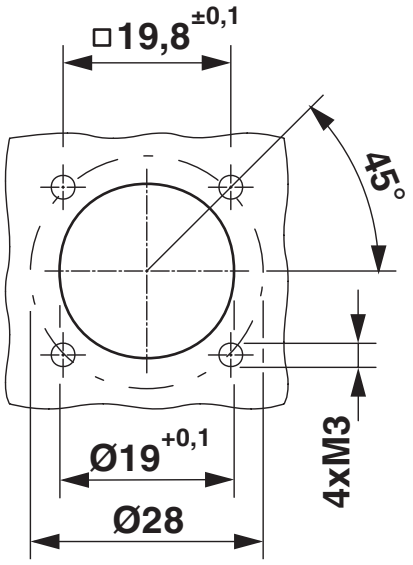

Installation dimensions

Schematic diagram

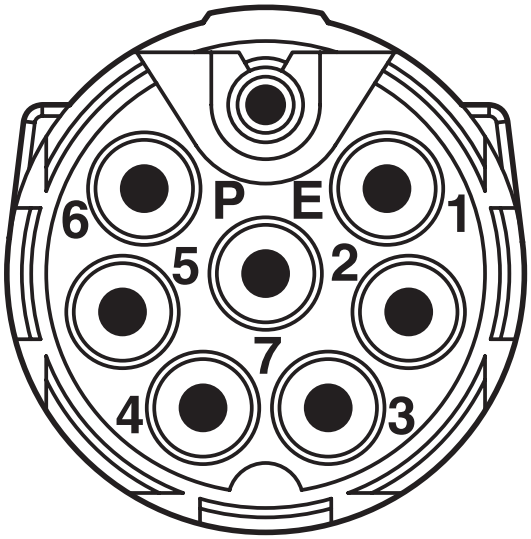

Connector pin assignment

Approvals

To download certificates, visit the product detail page: https://www.phoenixcontact.com/us/products/1618790

UL Recognized
Approval ID: E153698-20140124

	Nominal voltage U_N	Nominal current I_N	Cross section AWG	Cross section mm^2
keine				
Power	600 V	5 A	-	-
Signal	600 V	4 A	-	-

cUL Recognized
Approval ID: E153698-20140124

	Nominal voltage U_N	Nominal current I_N	Cross section AWG	Cross section mm^2
keine				
Power	600 V	5 A	-	-
Signal	600 V	4 A	-	-

cUL Recognized
Approval ID: E335019-20111129

	Nominal voltage U_N	Nominal current I_N	Cross section AWG	Cross section mm^2
keine				
Power	600 V	5 A	-	-
Signal	600 V	4 A	-	-

UL Recognized
Approval ID: E335019-20111129

	Nominal voltage U_N	Nominal current I_N	Cross section AWG	Cross section mm^2
keine				
Power	600 V	5 A	-	-
Signal	600 V	4 A	-	-

Classifications

ECLASS

ECLASS-13.0	27440109
ECLASS-15.0	27440109

ETIM

ETIM 10.0	EC003569

UNSPSC

UNSPSC 21.0	39121400

Environmental product compliance

EU RoHS

Fulfills EU RoHS substance requirements	Yes, No exemptions

China RoHS

Environment friendly use period (EFUP)	EFUP-E
	No hazardous substances above the limits

EU REACH SVHC

REACH candidate substance (CAS No.)	No substance above 0.1 wt%

Phoenix Contact 2026 © - all rights reserved
https://www.phoenixcontact.com

Phoenix Contact USA
586 Fulling Mill Road
Middletown, PA 17057, United States
(+717) 944-1300
info@phoenixcon.com