RC-19P1NT24300 - Device connector rear mounting

1602723

https://www.phoenixcontact.com/us/products/1602723

Please be informed that the data shown in this PDF document is generated from our online catalog. Please find the complete data in the user documentation. Our general terms of use for downloads are valid.



The figure shows the 12-pos. product version

M23, Device connector rear mounting, application: Signal, series: RC, straight, Screw locking mechanism, No. of pos.: 16+3, Direction of rotation: Standard, contact connection type: Pin, Solder-in connection, Radial O-ring, Panel thickness min.: 2.7 mm, Panel thickness max.: 3.5 mm, coding: N, this item is expected to be lead-free from Q1 2027 in accordance with RoHS II without exception 6c (Pb < 0.1%), a lead-free alternative is possible on request in advance. This product is in the process of being discontinued. This product must no longer be considered for new projects. Please contact your sales representative for alternatives.

Commercial data

Item number	1602723
Packing unit	20 pc
Minimum order quantity	20 pc
Note	Made to order (non-returnable)
Sales key	AB31
Product key	ABRAFR
GTIN	4046356241205
Weight per piece (including packing)	38.27 g
Weight per piece (excluding packing)	34.851 g
Customs tariff number	85366990
Country of origin	DE

Technical data

Product properties

Product type	Circular connectors (device side)

Connector

Insulating body

Coding	N
Connection method	Solder-in connection
Contact switching type	Pin
Application	Signal
Number of positions	19
Direction of rotation	Standard
Connection profile	16+3
Number (Contact group 1)	3
Contact diameter (Contact group 1)	1.5 mm
Litz wires Min. cross section (Contact group 1)	0.08 mm²
Litz wires Max. cross section (Contact group 1)	1 mm²
Rated current Contact (Contact group 1)	10 A (for max. connection cross section)
Rated voltage Contact (Contact group 1)	48 V AC
	74 V DC
Rated surge voltage	1.5 kV
Overvoltage category	III
Degree of pollution	3
Number (Contact group 2)	16
Contact diameter (Contact group 2)	1 mm
Litz wires Max. cross section (Contact group 2)	1 mm²
Rated current Contact (Contact group 2)	8 A

Housing

Type	Flange housing
Thread type	M23
Design	straight
Type of locking	Screw locking mechanism
Pg screw connection	none
Mounting type	Rear mounting/square flange (4x M3)
Material (Housing)	Metal
Degree of protection (plugged in)	IP67
Seal for the device	Radial O-ring

Drawings

Dimensional drawing

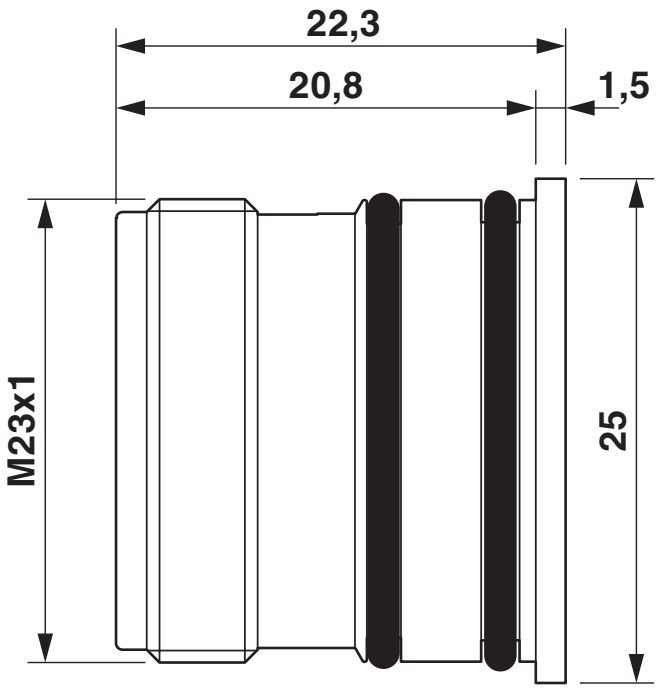

Dimensional drawing

Dimensional drawing

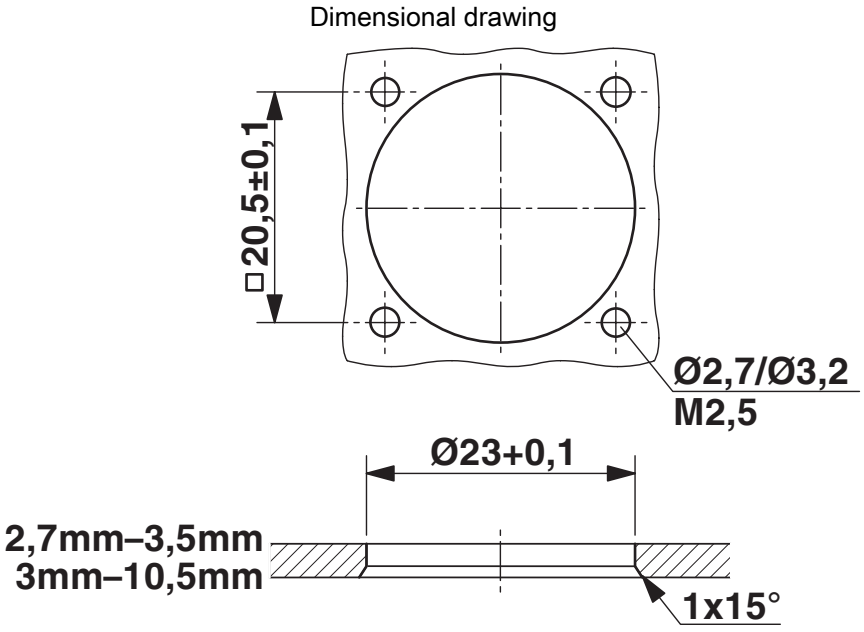

Installation dimensions

Schematic diagram

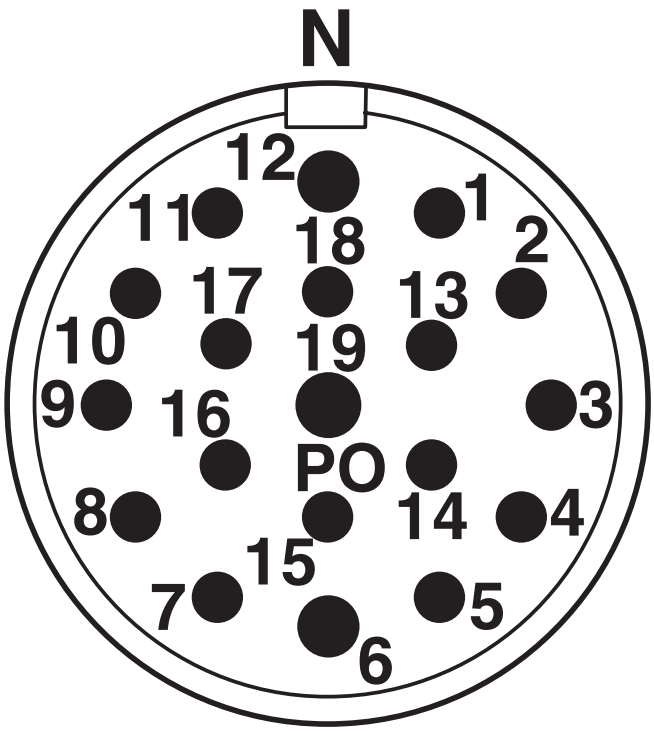

Connector pin assignment

Classifications

ECLASS

ECLASS-13.0	27440109
ECLASS-15.0	27440109

ETIM

ETIM 10.0	EC003569

UNSPSC

UNSPSC 21.0	39121400

Environmental product compliance

EU RoHS

Fulfills EU RoHS substance requirements	Yes
Exemption	6(c)

China RoHS

Environment friendly use period (EFUP)	EFUP-50
	An article-related China RoHS declaration table can be found in the download area for the respective article under "Manufacturer declaration". For all articles with EFUP-E, no China RoHS declaration table issued and required.

EU REACH SVHC

REACH candidate substance (CAS No.)	Lead(CAS: 7439-92-1)
SCIP	e1de8a1a-60ec-4024-a832-bed0d07bafd5

Phoenix Contact 2026 © - all rights reserved
https://www.phoenixcontact.com

Phoenix Contact USA
586 Fulling Mill Road
Middletown, PA 17057, United States
(+717) 944-1300
info@phoenixcon.com