RC-16P1N122200 - Device connector front mounting

1600540

https://www.phoenixcontact.com/us/products/1600540

Please be informed that the data shown in this PDF document is generated from our online catalog. Please find the complete data in the user documentation. Our general terms of use for downloads are valid.

M23, Device connector front mounting, application: Signal, series: RC, straight, shielded: yes, Screw locking mechanism, No. of pos.: 16, Direction of rotation: Standard, contact connection type: Pin, Solder cup, Flat gasket, flange dimensions: 25 mm x 25 mm, Panel thickness min.: 1 mm, coding: N. This product is in the process of being discontinued. This product must no longer be considered for new projects. Please contact your sales representative for alternatives. Alternative products: 1679717

Commercial data

Item number	1600540
Packing unit	40 pc
Minimum order quantity	1 pc
Note	Made to order (non-returnable)
Sales key	AB31
Product key	ABRAFL
GTIN	4046356230582
Weight per piece (including packing)	34.435 g
Weight per piece (excluding packing)	32.33 g
Customs tariff number	85366990
Country of origin	DE

Technical data

Product properties

Product type	Circular connectors (device side)

Connector

Insulating body

Coding	N
Material (Insulating body)	PBT
Material (Contact)	CuZn
Material (Contact surface)	Ni/Au
Insertion/withdrawal cycles	50
Connection method	Solder cup
Contact switching type	Pin
Application	Signal
Number of positions	16
Direction of rotation	Standard
Connection profile	16
Number (Contact group 1)	16
Contact diameter (Contact group 1)	1 mm
Litz wires Min. cross section (Contact group 1)	0.08 mm²
Litz wires Max. cross section (Contact group 1)	1 mm²
Rated current Contact (Contact group 1)	8 A (for max. connection cross section)
Rated voltage Contact (Contact group 1)	48 V AC
	74 V DC
Rated surge voltage	1.5 kV
Overvoltage category	III
Degree of pollution	3

Housing

Type	Flange housing
Thread type	M23
Design	straight
Type of locking	Screw locking mechanism
Pg screw connection	none
Mounting type	Front mounting/square flange (4x Ø 2.7 mm)
Flange dimensions	25 mm x 25 mm
Material (Housing)	GD-Zn
Material (Housing surface)	Ni
Material (Rotating parts)	CuZn
Degree of protection (plugged in)	IP67
Seal for the device	Flat gasket

Drawings

Dimensional drawing

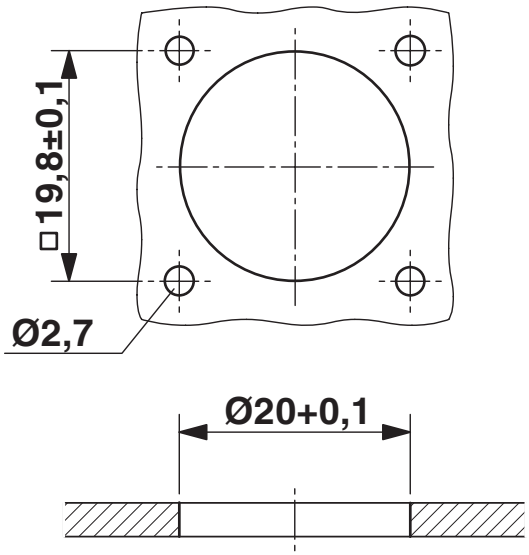

Installation dimensions

Schematic diagram

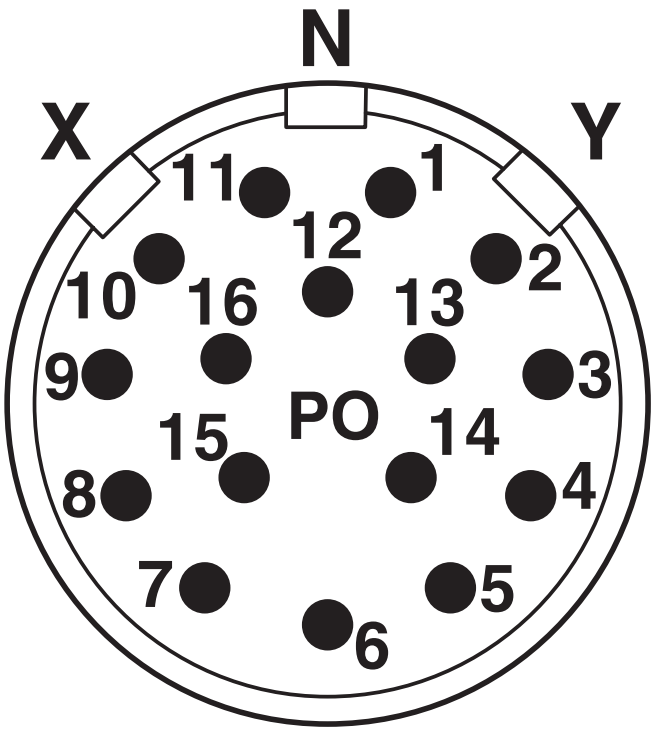

Connector pin assignment

Schematic diagram

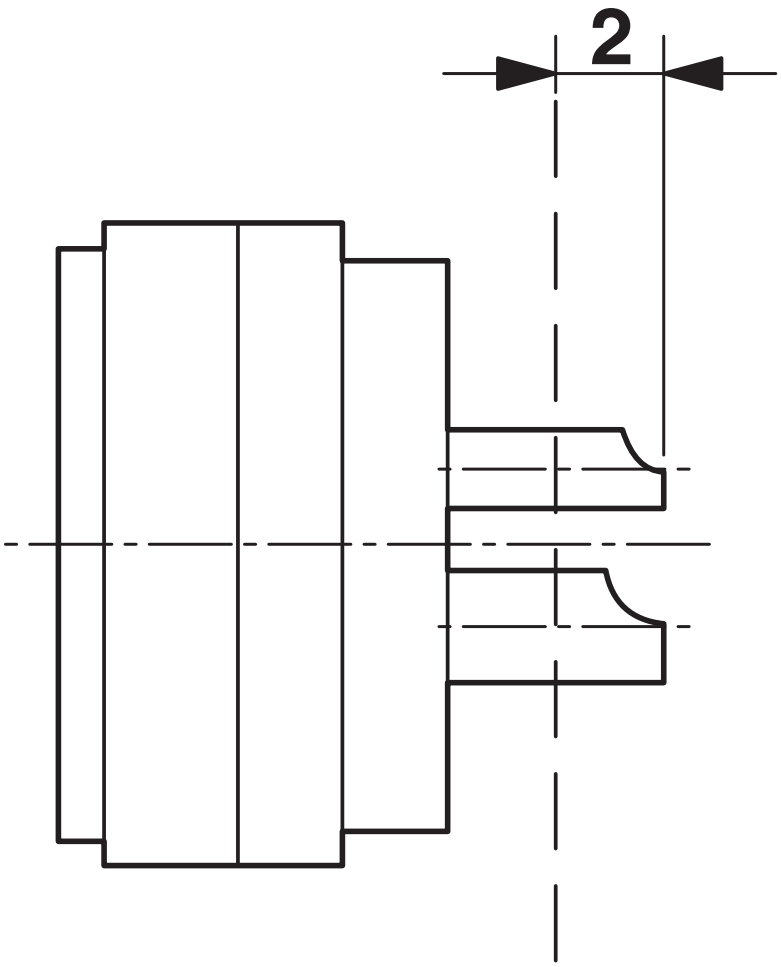

Dimensional drawing

Classifications

ECLASS

ECLASS-13.0	27440109
ECLASS-15.0	27440109

ETIM

ETIM 10.0	EC003569

UNSPSC

UNSPSC 21.0	39121400

Environmental product compliance

EU RoHS

Fulfills EU RoHS substance requirements	Yes, No exemptions

China RoHS

Environment friendly use period (EFUP)	EFUP-E
	No hazardous substances above the limits

EU REACH SVHC

REACH candidate substance (CAS No.)	No substance above 0.1 wt%

Phoenix Contact 2026 © - all rights reserved
https://www.phoenixcontact.com

Phoenix Contact USA
586 Fulling Mill Road
Middletown, PA 17057, United States
(+717) 944-1300
info@phoenixcon.com