# HCC 4-F - Female insert

1600001

https://www.phoenixcontact.com/us/products/1600001

Please be informed that the data shown in this PDF document is generated from our online catalog. Please find the complete data in the user documentation. Our general terms of use for downloads are valid.




Female insert, nom. voltage: 500 V, nominal current: 25 A, number of connections: 10, number of positions: 10, connection method: Screw connection, Rated cross section: 4 mm$^2$, cross section: 0.2 mm$^2$ - 4 mm$^2$, mounting type: direct screw connection, color: gray



## Your advantages

- Sturdy strain relief for plug and socket
- Touch proof, even when unplugged

## Commercial data

| | |
|---|---|
| Item number | 1600001 |
| Packing unit | 50 pc |
| Minimum order quantity | 1 pc |
| Sales key | BE19 |
| Product key | BE1ZWX |
| GTIN | 4017918021733 |
| Weight per piece (including packing) | 43.48 g |
| Weight per piece (excluding packing) | 43.48 g |
| Customs tariff number | 85366990 |
| Country of origin | PL |

## Technical data

### Product properties

| | |
|---|---|
| Product type | High current terminal block |
| Number of positions | 10 |
| Pitch | 7.62 mm |
| Number of connections | 10 |
| Number of rows | 1 |
| Potentials | 10 |

Insulation characteristics

| | |
|---|---|
| Overvoltage category | III |
| Degree of pollution | 3 |

### Electrical properties

| | |
|---|---|
| Rated surge voltage | 6 kV |
| Maximum power dissipation for nominal condition | 1.02 W |

### Connection data

| | |
|---|---|
| Number of connections per level | 10 |
| Nominal cross section | 4 mm² |
| Connection method | Screw connection |
| Screw thread | M3 |
| Tightening torque | 0.5 ... 0.6 Nm |
| Stripping length | 7 mm |
| Internal cylindrical gage | A4 |
| Connection in acc. with standard | IEC 61984 |
| Conductor cross-section rigid | 0.2 mm² ... 4 mm² |
| Cross section AWG | 24 ... 12 (converted acc. to IEC) |
| Conductor cross-section flexible | 0.2 mm² ... 4 mm² |
| Conductor cross-section, flexible [AWG] | 24 ... 12 (converted acc. to IEC) |
| Conductor cross-section flexible (ferrule without plastic sleeve) | 0.25 mm² ... 4 mm² |
| Flexible conductor cross-section (ferrule with plastic sleeve) | 0.25 mm² ... 4 mm² |
| 2 conductors with same cross section, rigid | 0.2 mm² ... 2.5 mm² |
| 2 conductors with same cross section, flexible | 0.2 mm² ... 2.5 mm² |
| 2 conductors with same cross section, flexible, with ferrule without plastic sleeve | 0.25 mm² ... 1.5 mm² |
| 2 conductors with the same cross section, flexible, with TWIN ferrule with plastic sleeve | 0.5 mm² ... 2.5 mm² |
| Nominal cross section | 4 mm² |
| Nominal current | 25 A |
| Maximum load current | 25 A (with 4 mm² conductor cross-section) |
| Nominal voltage | 500 V |

### Dimensions

| | |
|---|---|
| Dimensional drawing | 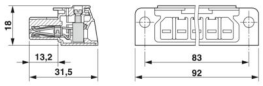  |
| Width | 92 mm |
| Height | 31.5 mm |
| Depth | 18 mm |
| Drill hole spacing | 83 mm |
| Pitch | 7.62 mm |

## Material specifications

| | |
|---|---|
| Color | gray (RAL 7042) |
| Flammability rating according to UL 94 | V2 |
| Insulating material group | I |
| Insulating material | PA |
| Static insulating material application in cold | -40 °C |
| Relative insulation material temperature index (Elec., UL 746 B) | 125 °C |

## Mechanical properties

### Mechanical data

| | |
|---|---|
| Open side panel | No |

### Technical data

| | |
|---|---|
| Drill hole spacing | 83 mm |

## Environmental and real-life conditions

### Ambient conditions

| | |
|---|---|
| Ambient temperature (operation) | -60 °C ... 110 °C (Operating temperature range incl. self-heating; for max. short-term operating temperature, see RTI Elec.) |
| Ambient temperature (storage/transport) | -25 °C ... 60 °C (for a short time, not exceeding 24 h, -60 °C to +70 °C) |
| Ambient temperature (assembly) | -5 °C ... 70 °C |
| Ambient temperature (actuation) | -5 °C ... 70 °C |
| Permissible humidity (operation) | 20 % ... 90 % |
| Permissible humidity (storage/transport) | 30 % ... 70 % |

## Standards and regulations

| | |
|---|---|
| Connection in acc. with standard | IEC 61984 |

## Mounting

| | |
|---|---|
| Mounting type | direct screw connection |

## Drawings

Dimensional drawing

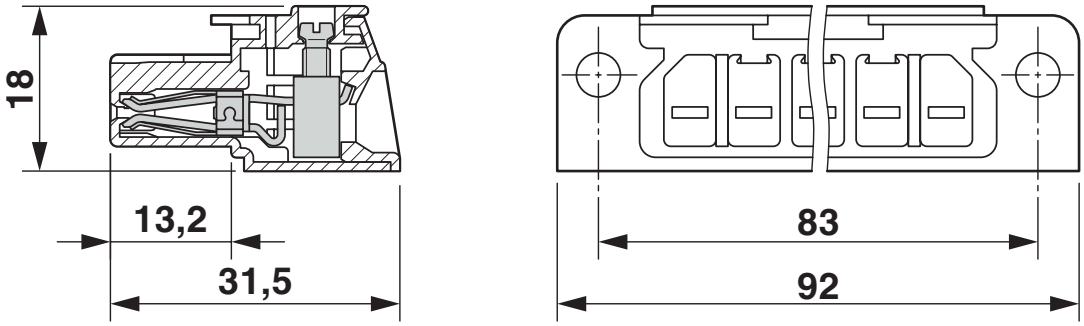


Diagram

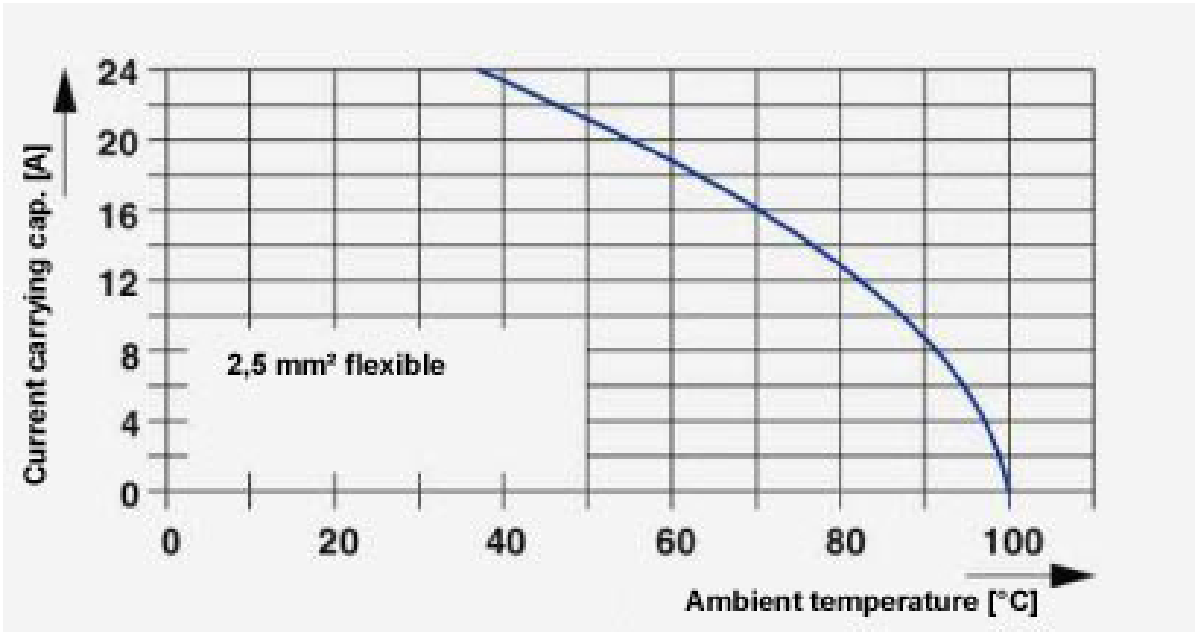

Diagram

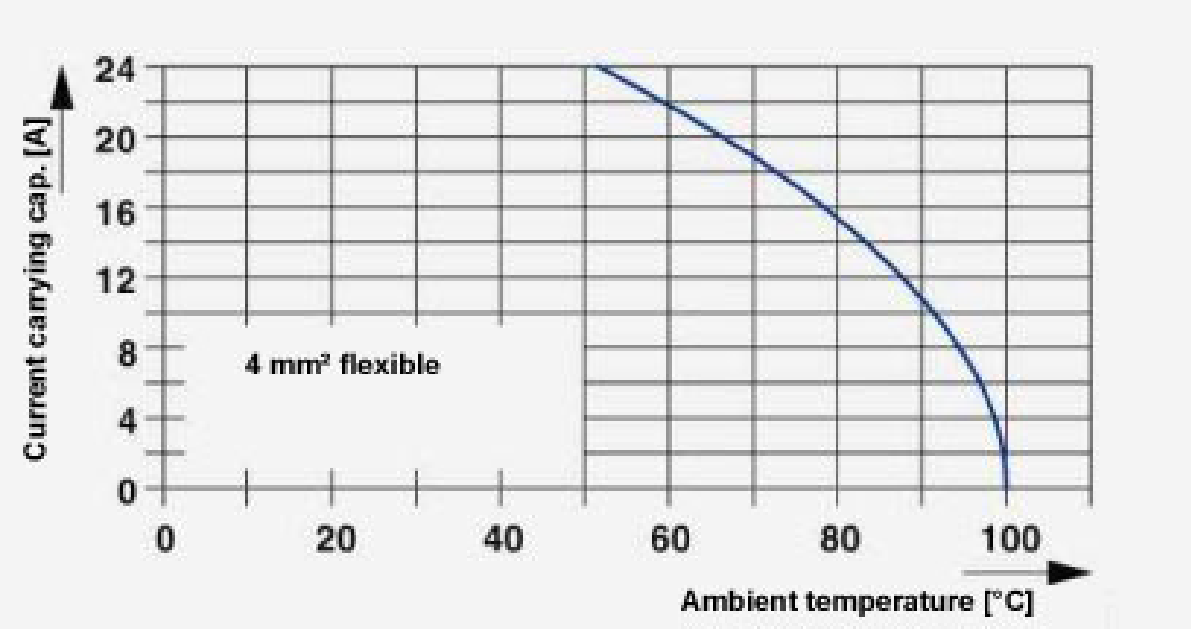
Current carrying cap. [A]
24
20
16
12
8
4
0
4 mm² flexible
0
20
40
60
80
100
Ambient temperature [°C]

Circuit diagram



## Approvals

To download certificates, visit the product detail page: https://www.phoenixcontact.com/us/products/1600001

**CSA**
Approval ID: 158887

| | Nominal voltage $U_N$ | Nominal current $I_N$ | Cross section AWG | Cross section $mm^2$ |
|---|---|---|---|---|
| B | | | | |
| | 300 V | 20 A | 30 - 10 | - |

**UL Recognized**
Approval ID: FILE E 60425

| | Nominal voltage $U_N$ | Nominal current $I_N$ | Cross section AWG | Cross section $mm^2$ |
|---|---|---|---|---|
| B | | | | |
| | 250 V | 20 A | 30 - 10 | - |
| C | | | | |
| | 300 V | 20 A | 30 - 10 | - |
| keine | | | | |
| | 300 V | 20 A | 30 - 10 | - |

**DNV GL**
Approval ID: TAE00001EZ

## Classifications

### ECLASS

| | |
|---|---|
| ECLASS-13.0 | 27141190 |
| ECLASS-15.0 | 27141190 |

### ETIM

| | |
|---|---|
| ETIM 10.0 | EC002848 |

### UNSPSC

| | |
|---|---|
| UNSPSC 21.0 | 39121400 |

## Environmental product compliance

EU RoHS

| | |
|---|---|
| Fulfills EU RoHS substance requirements | Yes |
| Exemption | 6(c) |

China RoHS

| | |
|---|---|
| Environment friendly use period (EFUP) | EFUP-50 |
| | An article-related China RoHS declaration table can be found in the download area for the respective article under "Manufacturer declaration". For all articles with EFUP-E, no China RoHS declaration table issued and required. |

EU REACH SVHC

| | |
|---|---|
| REACH candidate substance (CAS No.) | Lead(CAS: 7439-92-1) |
| SCIP | bd9b3fce-9bd5-4c44-8662-b3ba8f600df3 |

EF3.1 Climate Change

| | |
|---|---|
| CO2e kg | 0.247 kg CO2e |


Phoenix Contact 2026 © - all rights reserved
https://www.phoenixcontact.com



Phoenix Contact USA
586 Fulling Mill Road
Middletown, PA 17057, United States
(+717) 944-1300
info@phoenixcon.com