RC-0000000E000 - Housing for circular connector

1592813

https://www.phoenixcontact.com/us/products/1592813

Please be informed that the data shown in this PDF document is generated from our online catalog. Please find the complete data in the user documentation. Our general terms of use for downloads are valid.



Housing for circular connector, series: RC, straight, Screw locking mechanism, M23, Radial O-ring, shielded: yes, panel thickness min.: 3 mm, panel thickness max.: 10.5 mm. This product is in the process of being discontinued. This product must no longer be considered for new projects. Please contact your sales representative for alternatives.

Commercial data

Item number	1592813
Packing unit	40 pc
Minimum order quantity	1 pc
Sales key	AB31
Product key	ABRAFS
GTIN	4046356192897
Weight per piece (including packing)	37.42 g
Weight per piece (excluding packing)	35.43 g
Customs tariff number	85366990
Country of origin	DE

Technical data

Product properties

Product type	Circular connector housing
Series	RC
Application	Signal
Shielded	yes
Thread type	M23

Dimensions

Dimensional drawing	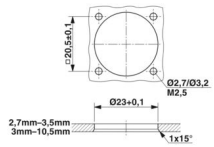
Panel thickness	3 mm ... 10.5 mm

Material specifications

Material Housing	GD-Zn
Material Housing surface	Ni
Material Rotating parts	CuZn
Gasket and O-ring material	FPM

Connector

Type	straight

Environmental and real-life conditions

Ambient conditions

Degree of protection	IP67
Ambient temperature (operation)	-20 °C ... 125 °C
Altitude	2000 m

Mounting

Mounting type	Rear mounting/square flange (4x M3)

Drawings

Dimensional drawing

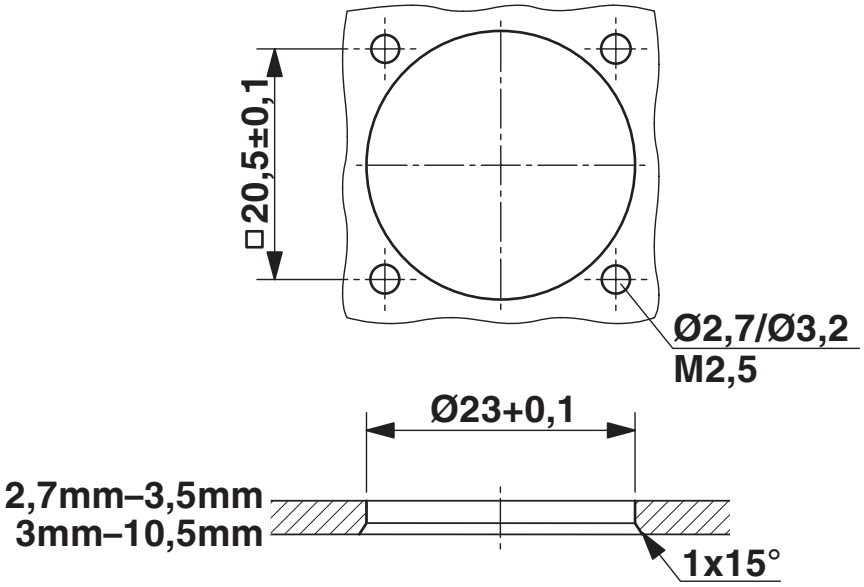

Installation dimensions

Classifications

ECLASS

ECLASS-13.0	27440224
ECLASS-15.0	27440224

ETIM

ETIM 10.0	EC003556

UNSPSC

UNSPSC 21.0	31261500

Environmental product compliance

EU RoHS

Fulfills EU RoHS substance requirements	Yes
Exemption	6(c)

China RoHS

Environment friendly use period (EFUP)	EFUP-50
	An article-related China RoHS declaration table can be found in the download area for the respective article under "Manufacturer declaration". For all articles with EFUP-E, no China RoHS declaration table issued and required.

EU REACH SVHC

REACH candidate substance (CAS No.)	Lead(CAS: 7439-92-1)
SCIP	8e2177c0-a688-477e-8d66-69513083fa26

Phoenix Contact 2026 © - all rights reserved
https://www.phoenixcontact.com

Phoenix Contact USA
586 Fulling Mill Road
Middletown, PA 17057, United States
(+717) 944-1300
info@phoenixcon.com