NBC-P12MSX/ 2,0-94F/R4AC - Network cable

1584453

https://www.phoenixcontact.com/us/products/1584453

Please be informed that the data shown in this PDF document is generated from our online catalog. Please find the complete data in the user documentation. Our general terms of use for downloads are valid.

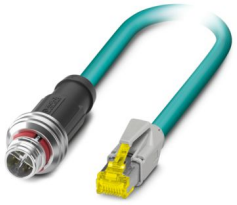

Network cable, Ethernet CAT6$_A$ (10 Gbps), 8-position, PUR halogen-free, water blue RAL 5021, shielded (Advanced Shielding Technology), Plug straight M12, coding: X / IP67, on Plug straight RJ45 / IP20, cable length: 2 m

Commercial data

Item number	1584453
Packing unit	1 pc
Minimum order quantity	1 pc
Sales key	BF04
Product key	AF1CMJ
GTIN	4067923123809
Weight per piece (including packing)	132.8 g
Weight per piece (excluding packing)	132.8 g
Customs tariff number	85444290
Country of origin	PL

Technical data

Product properties

Product type	Data cable preassembled
Application	Standard
Number of positions	8
Shielded	yes

Interfaces

Bus system	Ethernet
Signal type/category	Ethernet $CAT6_A$, 10 Gbps

Signaling

Status display	no
Status display present	no

Electrical properties

Nominal voltage U_N	48 V AC
	60 V DC
Nominal current I_N	0.5 A
Transmission medium	Copper
Transmission speed	10 Gbps

Connector

Connection 1

Dimensional drawing	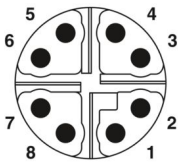 Pin assignment of M12 plug, 8-pos., X-coded, pin side view
Type	M12 Plug, straight, 8-position, shielded (Advanced Shielding Technology), Push Pull, Keying: X, Ethernet
Number of positions	8
Shielded	yes
Shielding	Advanced Shielding Technology
Signal type/category	Ethernet $CAT6_A$ (IEC 11801), 10 Gbps
Insertion/withdrawal cycles	≥ 100
Insulation resistance	≥ 100 MΩ
Overvoltage category	II
Degree of pollution	3
Material Contact	CuZn

Material Contact surface	Ni/Au
Material Contact carrier	PA 6.6
Material Grip body	TPU, hardly inflammable, self-extinguishing
Material Seal	FKM
Flammability rating according to UL 94	V0
Ambient temperature (operation)	-25 °C ... 85 °C
Standard designation	M12 connector
Standards/regulations	IEC 61076-2-010

Connection 2

Dimensional drawing	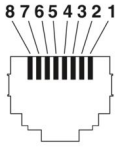 Connector pin assignment plug RJ45
Type	RJ45 Plug, straight, 8-position, Ethernet, CC-Link IE
Number of positions	8
Signal type/category	Ethernet $CAT6_A$, 10 Gbps
	CC-Link IE $CAT6_A$, 10 Gbps
Insertion/withdrawal cycles	≥ 750
Insulation resistance	≥ 100 Ω
Overvoltage category	I
Degree of pollution	2
Material Contact	CuSn
Material Contact surface	Ni/Au
Material Contact carrier	PC
Material Housing	PA
Color (Housing)	gray
Flammability rating according to UL 94	V2
Degree of protection	IP20 (RJ45 connector)
Ambient temperature (operation)	-25 °C ... 60 °C

Cable/line

Cable length	2 m

Ethernet 10 Gbit [94F]

Dimensional drawing	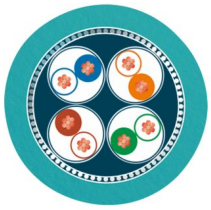
UL AWM Style	21238 (80 °C / 600 V)
Number of positions	8
Shielded	yes
Cable type	Ethernet 10 Gbit [94F]
Conductor structure	4x2xAWG26/7; S/FTP
AWG signal line	26
Conductor cross-section	4x 2x 0.14 mm²
Wire diameter incl. insulation	1 mm ±0.05 mm
External cable diameter	6.40 mm ±0.2 mm
Outer sheath, material	PUR
External sheath, color	water blue RAL 5021
Conductor material	Bare Cu litz wires
Material wire insulation	Foamed PE
Single wire, color	white/blue-blue, white/orange-orange, white/green-green, white/brown-brown
Twisted pairs	2 cores to the pair
Overall twist	4 pairs for core
Optical shield covering	70 %
Insulation resistance	≥ 500 MΩ*km
Loop resistance	≤ 290.00 Ω/km
Wave impedance	100 Ω ±5 Ω (at 100 MHz)
Nominal voltage, cable	≤ 100 V
Test voltage Core/Core	2000 V (50 Hz, 1 min.)
Test voltage Core/Shield	2000.00 V (50 Hz, 1 min.)
Minimum bending radius, fixed installation	4 x D
Minimum bending radius, flexible installation	8 x D
Smallest bending radius, fixed installation	26 mm
Smallest bending radius, movable installation	51 mm
Halogen-free	according to IEC 60754-1
Flame resistance	according to IEC 60332-1-2
	in accordance with UN ECE-R 118.03
	according to CSA C 22.2 No. 210-FT1
Resistance to oil	in accordance with DIN EN 60811-404
Ambient temperature (operation)	-40 °C ... 80 °C (cable, fixed installation)
	-20 °C ... 80 °C (Cable, flexible installation)

Environmental and real-life conditions

Ambient conditions

Degree of protection	IP67/IP20
Specification	IEC 60512-6-4:2002-02
	IEC 60512-1-1:2002-02
	IEC 60512-2-1:2002-02
	IEC 60512-2-5:2003-05
Contact disturbance requirement	Duration of the disturbance: max. 1 µs
Requirements, Contact resistance	Resistance difference ΔR ≤ 15 mΩ (for each channel)
Requirements, visual check	No defects that impair normal functionality.
Lowest frequency	10 Hz
Highest frequency	500 Hz
Amplitude	0.35 mm
Acceleration	5g
Sweep speed	1 octave/min
No. of cycles	10
Test directions	X-, Y- and Z-axis

Shock

Specification	IEC 60512-6-3:2002-02
	IEC 60512-1-1:2002-02
	IEC 60512-2-1:2002-02
	IEC 60512-2-5:2003-05
Contact disturbance requirement	Duration of the disturbance: max. 1 µs
Requirements, Contact resistance	Resistance difference ΔR ≤ 15 mΩ (for each channel)
Requirements, visual check	No defects that impair normal functionality.
Acceleration	50g
Test directions	X-, Y- and Z-axis
Pulse shape	Half-sine
Number of shocks per direction	3
Duration of the nominal shock	11 ms
Specification	IEC 60512-11-4:2002-02
	IEC 60512-1-1:2002-02
	IEC 60512-2-1:2002-02
	IEC 60512-3-1:2002-02
	IEC 60512-4-1:2003-05
Requirements, Contact resistance	Resistance difference ΔR ≤ 15 mΩ (for each channel)
Requirements, insulation resistance	R_i ≥ 100 MΩ
Requirements, dielectric strength	There must be no electrical flashovers or disruptive charges for the duration of the test. The maximum permissible leakage current must not be exceeded.
Requirements, visual check	No defects that impair normal functionality.
No. of cycles	5

Dwell time	30 min
Transition duration	≤ 10 s
Minimum temperature	-40 °C
Maximum temperature	+85 °C
Additional text	The values specified apply to all repetitions of the same test within the normative test sequence.
Specification	IEC 60512-11-9:2002-02
	IEC 60512-1-1:2002-02
	IEC 60512-3-1:2002-02
Requirements, insulation resistance	R_I ≥ 100 MΩ
Requirements, visual check	No defects that impair normal functionality.
Test duration	16 h
Temperature for testing	85 °C
Specification	IEC 60512-11-12:2002-02
	IEC 60512-1-1:2002-02
Requirements, visual check	No defects that impair normal functionality.
Test duration	12 h + 12 h
Temperature for testing	25 °C
Test procedure	Db
Specification	IEC 60512-11-10:2002-02
	IEC 60512-1-1:2002-02
Requirements, visual check	No defects that impair normal functionality.
Test duration	6 h
Temperature for testing	-40 °C
Specification	IEC 60512-11-12:2002-02
	IEC 60512-1-1:2002-02
	IEC 60512-2-1:2002-02
	IEC 60512-3-1:2002-02
	IEC 60512-4-1:2003-05
	IEC 60512-13-2:2006-02
Requirements, Contact resistance	Resistance difference ΔR ≤ 15 mΩ (for each channel)
Requirements, insulation resistance	R_I ≥ 100 MΩ
Requirements, dielectric strength	There must be no electrical flashovers or disruptive charges for the duration of the test. The maximum permissible leakage current must not be exceeded.
Requirements, insertion and withdrawal forces	Maximum permissible insertion force $F_{insertion}$ < 30 N Maximum permissible withdrawal force $F_{withdrawal}$ < 30 N
Requirements, visual check	No defects that impair normal functionality.
Test duration	24 h
Temperature for testing	25 °C
Specification	IEC 60512-1-1:2002-02
	IEC 60512-3-1:2002-02
	IEC 60512-4-1:2003-05
Requirements	Water that is sprayed against the housing as a jet from any direction must not have any harmful effect.

Requirements, insulation resistance	$R_I \geq 100\ M\Omega$
Requirements, dielectric strength	There must be no electrical flashovers or disruptive charges for the duration of the test. The maximum permissible leakage current must not be exceeded.
Requirements, visual check	No defects that impair normal functionality.
Test duration	1 min/m² at least 3 min
Additional text	The values specified apply to all repetitions of the same test within the normative test sequence.
Specification	IEC 60512-1-1:2002-02
	IEC 60512-3-1:2002-02
	IEC 60512-4-1:2003-05
Requirements	Water must not penetrate in a harmful quantity when the housing is temporarily submerged in water under standard pressure and time conditions.
Requirements, insulation resistance	$R_I \geq 100\ M\Omega$
Requirements, dielectric strength	There must be no electrical flashovers or disruptive charges for the duration of the test. The maximum permissible leakage current must not be exceeded.
Requirements, visual check	No defects that impair normal functionality.
Test duration	30 min
Additional text	The values specified apply to all repetitions of the same test within the normative test sequence.
Specification	IEC 60512-1-1:2002-02
	IEC 60512-2-1:2002-02
	IEC 60512-3-1:2002-02
	IEC 60512-13-2:2006-02
Requirements	Dust must not enter the housing.
Requirements, Contact resistance	Resistance difference ΔR ≤ 15 mΩ (for each channel)
Requirements, insertion and withdrawal forces	Maximum allowable insertion force $F_{insertion} < 23\ N$ Maximum allowable withdrawal force $F_{withdrawal} < 30\ N$
Requirements, visual check	No defects that impair normal functionality.
Test duration	8 h
Additional text	The values specified apply to all repetitions of the same test within the normative test sequence.
Specification	IEC 60512-13-5:2006-02
Requirements	No damage that can impair normal functionality. Connectors must only be able to be plugged in when they are in the correct position and combination. The design must prevent mismatching. Polarization prevents incorrect electrical contact.
Insertion force	1,5 x mating force; at least 35 N
Specification	IEC 60512-9-1:2010-03
	IEC 60512-1-1:2002-02
	IEC 60512-2-1:2002-02
Requirements, Contact resistance	Resistance difference ΔR ≤ 15 mΩ (for each channel)
Requirements, visual check	No defects that impair normal functionality.

No. of cycles	50
Specification	IEC 60512-11-7:2003-05
Requirements	No damage (corrosion) to the metal body that impairs normal functionality.
Requirements, Contact resistance	Resistance difference ΔR ≤ 15 mΩ (for each channel)
Test duration	4 days
Test procedure	Method 4
Specification	IEC 60512-9-1:2010-03
Requirements, Contact resistance	Resistance difference ΔR ≤ 15 mΩ (for each channel)
Requirements, insulation resistance	R_I ≥ 100 MΩ
Requirements, dielectric strength	There must be no electrical flashovers or disruptive charges for the duration of the test. The maximum permissible leakage current must not be exceeded.
Requirements, visual check	No defects that impair normal functionality.
No. of cycles	50
Specification	IEC 60512-9-1:2010-03
	IEC 60512-1-1:2002-02
	IEC 60512-2-1:2002-02
Requirements, Contact resistance	Resistance difference ΔR ≤ 15 mΩ (for each channel)
Requirements, visual check	No defects that impair normal functionality.
No. of cycles	100
Requirements	No change in the material properties that would limit the intended use.
Test duration	24 h
Temperature for testing	+85 °C ±2 °C
Test liquid	IRM 902
Specification	IEC 61373:2010-05
	IEC 60512-1-1:2002-02
	IEC 60512-2-1:2002-02
Contact disturbance requirement	Duration of the disturbance: max. 1 µs
Requirements, Contact resistance	Resistance difference ΔR ≤ 15 mΩ (for each channel)
Requirements, visual check	No defects that impair normal functionality.
Acceleration	5g
Test directions	X-, Y- and Z-axis
Category	1
Pulse shape	Half-sine
Number of shocks per direction	3
Shock duration	30 ms
Specification	IEC 61373:2010-05
	IEC 60512-1-1:2002-02
	IEC 60512-2-1:2002-02
Contact disturbance requirement	Duration of the disturbance: max. 1 µs
Requirements, Contact resistance	Resistance difference ΔR ≤ 15 mΩ (for each channel)
Requirements, visual check	No defects that impair normal functionality.

Acceleration	30g
Test directions	X-, Y- and Z-axis
Category	2
Pulse shape	Half-sine
Number of shocks per direction	3
Shock duration	18 ms
Specification	IEC 61373:2010-05
	IEC 60512-1-1:2002-02
	IEC 60512-2-1:2002-02
Contact disturbance requirement	Duration of the disturbance: max. 1 µs
Requirements, Contact resistance	Resistance difference ΔR ≤ 15 mΩ (for each channel)
Requirements, visual check	No defects that impair normal functionality.
Lowest frequency	5 Hz
Highest frequency	150 Hz
Test directions	X-, Y- and Z-axis
Category	1
Class	B

Electrical tests

Specification	IEC 60512-2-1:2002-02
Requirements	Resistance difference ΔR ≤ 15 mΩ (for each channel) R_{max} - R_{wire} ≤ 10 mΩ (for each channel) R_{shield} - $R_{cableshield}$ ≤ 100 mΩ
Test current	0.1 A
Additional text	The values specified apply to all repetitions of the same test within the normative test sequence.
Specification	IEC 60512-3-1:2002-02
Requirements, insulation resistance	R_I ≥ 100 MΩ
Additional text	The values specified apply to all repetitions of the same test within the normative test sequence.
Specification	IEC 60512-4-1:2003-05
Requirements, dielectric strength	There must be no electrical flashovers or disruptive charges for the duration of the test. The maximum permissible leakage current must not be exceeded.
Test voltage	0.5 kV AC
Test duration	60 s
Additional text	The values specified apply to all repetitions of the same test within the normative test sequence.
Specification	IEC 60512-9-2:2011-11
	IEC 60512-1-1:2002-02
	IEC 60512-2-1:2002-02
	IEC 60512-3-1:2002-02
	IEC 60512-4-1:2003-05
Requirements	The sum of the ambient temperature and temperature rise of a connector must not exceed the upper limiting temperature.
Requirements, Contact resistance	Resistance difference ΔR ≤ 15 mΩ (for each channel)

Requirements, insulation resistance	$R_I \geq 100\ M\Omega$
Requirements, dielectric strength	There must be no electrical flashovers or disruptive charges for the duration of the test. The maximum permissible leakage current must not be exceeded.
Requirements, visual check	No defects that impair normal functionality.
Test current	0.5 A
Test duration	1000 h
Temperature for testing	40 °C
Upper limiting temperature	85 °C
Specification	IEC 60352-2:2006-02
Connection method	Crimp connections

Data integrity NEXT (Near End Cross Talk)

Specification	ISO/IEC 11801-1:2017-11 (following)
Requirements	The limits for the data transmission category set out in the specification must not be exceeded.

Data integrity RL (Return Loss)

Specification	ISO/IEC 11801-1:2017-11 (following)
Requirements	The limits for the data transmission category set out in the specification must not be exceeded.

Mechanical tests

Specification	IEC 60512-1-1:2002-02
Requirements, visual check	No defects that impair normal functionality.
Additional text	The values specified apply to all repetitions of the same test within the normative test sequence.

Dimensional examination

Specification	IEC 60512-1-2:2002-02
Requirements	All individual parts have been approved for the current revision status.
Specification	IEC 60512-13-2:2006-02
Requirements, insertion and withdrawal forces	Maximum permissible insertion force $F_{insertion} < 30$ N Maximum permissible withdrawal force $F_{withdrawal} < 30$ N
Additional text	The values specified apply to all repetitions of the same test within the normative test sequence.
Specification	IEC 60512-16-5:2008-07
Requirements	After 3 matings with the maximum gauge, the tested contacts must still be able to hold the minimum gauge.
Additional text	The values specified apply to all repetitions of the same test within the normative test sequence.

Drawings

Dimensional drawing

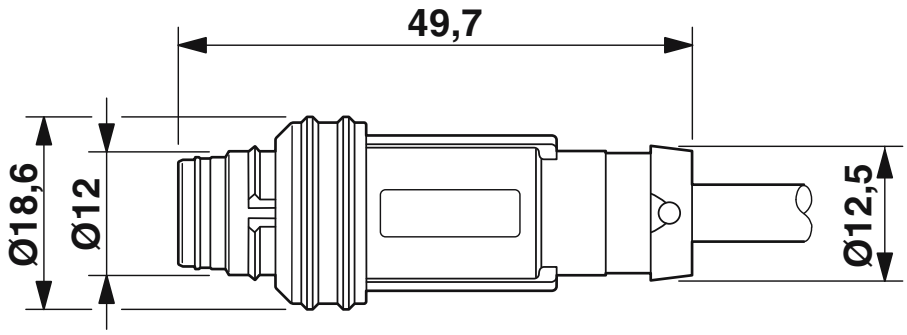

M12 push-pull male connector, straight

Dimensional drawing

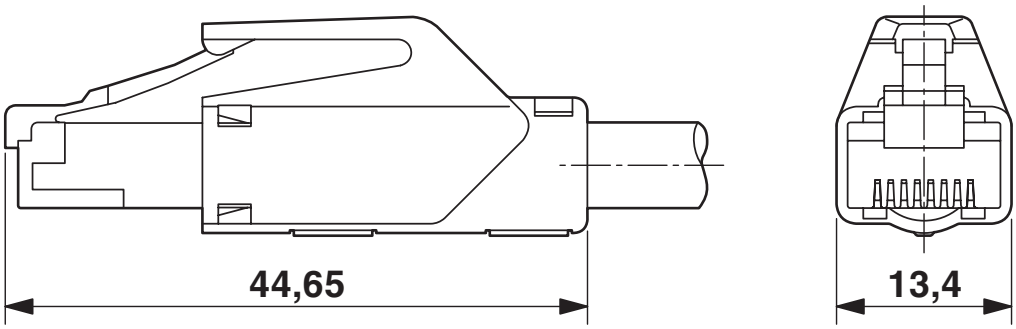

RJ45 connector, IP20

Schematic diagram

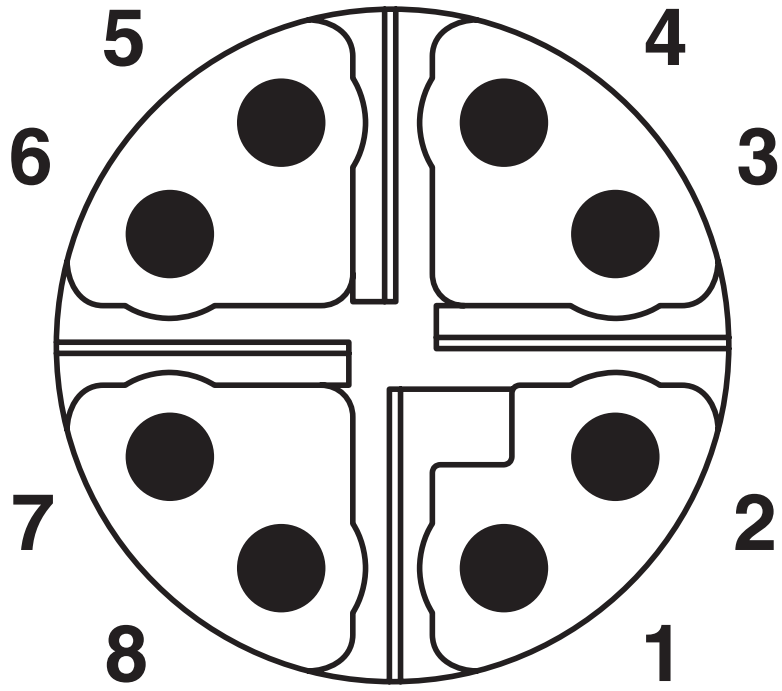

Pin assignment of M12 plug, 8-pos., X-coded, pin side view

Circuit diagram

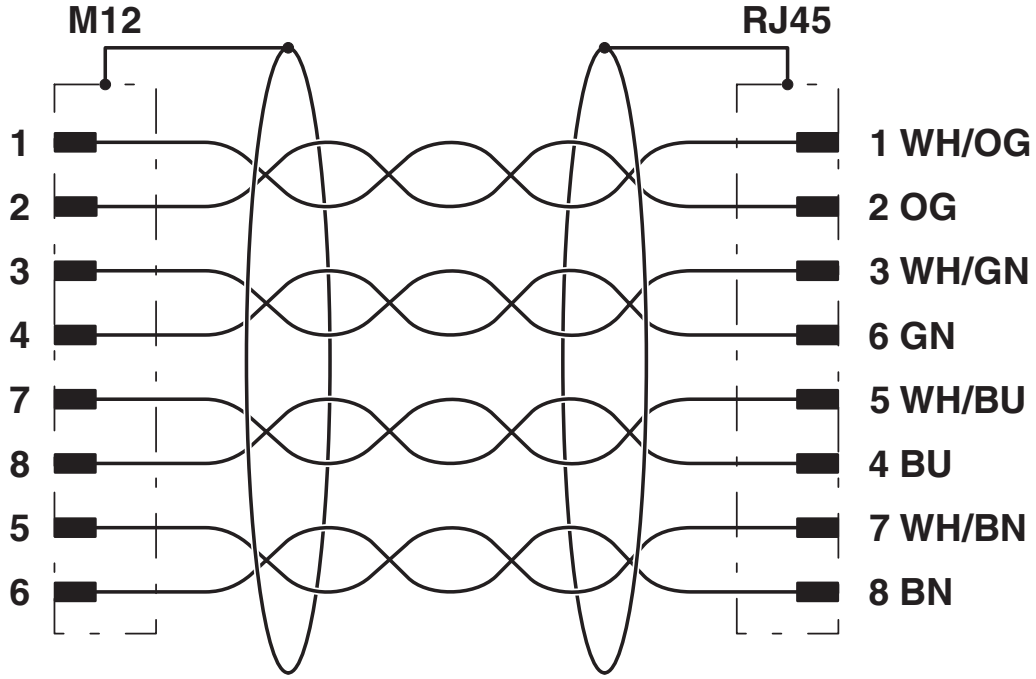

Contact assignment of the M12 and RJ45 plug

Classifications

ECLASS

ECLASS-13.0	27060307
ECLASS-15.0	27060307

ETIM

ETIM 10.0	EC002599

Environmental product compliance

EU RoHS

Fulfills EU RoHS substance requirements	Yes, No exemptions

China RoHS

Environment friendly use period (EFUP)	EFUP-E
	No hazardous substances above the limits

EU REACH SVHC

REACH candidate substance (CAS No.)	No substance above 0.1 wt%

Phoenix Contact 2026 © - all rights reserved
https://www.phoenixcontact.com

Phoenix Contact USA
586 Fulling Mill Road
Middletown, PA 17057, United States
(+717) 944-1300
info@phoenixcon.com