# NBC-P12MSX/ 1,0-94F/P12FSX - Network cable

1584446

https://www.phoenixcontact.com/us/products/1584446

Please be informed that the data shown in this PDF document is generated from our online catalog. Please find the complete data in the user documentation. Our general terms of use for downloads are valid.



Network cable, Ethernet CAT6$_A$ (10 Gbps), 8-position, PUR halogen-free, water blue RAL 5021, shielded (Advanced Shielding Technology), Plug straight M12, coding: X / IP67, on Socket straight M12 Push Pull, coding: X / IP67, cable length: 1 m

## Commercial data

| | |
|---|---|
| Item number | 1584446 |
| Packing unit | 1 pc |
| Minimum order quantity | 1 pc |
| Sales key | BF04 |
| Product key | AF1CMJ |
| GTIN | 4067923122406 |
| Weight per piece (including packing) | 100 g |
| Weight per piece (excluding packing) | 100 g |
| Customs tariff number | 85444290 |
| Country of origin | PL |

## Technical data

### Product properties

| | |
|---|---|
| Product type | Data cable preassembled |
| Application | Standard |
| Number of positions | 8 |
| Shielded | yes |

### Interfaces

| | |
|---|---|
| Bus system | Ethernet |
| Signal type/category | Ethernet $CAT6_A$, 10 Gbps |

### Signaling

| | |
|---|---|
| Status display | no |
| Status display present | no |

### Electrical properties

| | |
|---|---|
| Nominal voltage $U_N$ | 48 V AC |
| | 60 V DC |
| Nominal current $I_N$ | 0.5 A |
| Transmission medium | Copper |
| Transmission speed | 10 Gbps |

### Connector

Connection 1

| | |
|---|---|
| Dimensional drawing | 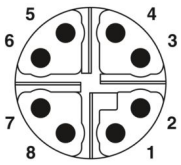 Pin assignment of M12 plug, 8-pos., X-coded, pin side view |
| Type | M12 Plug, straight, 8-position, shielded (Advanced Shielding Technology), Push Pull, Keying: X, Ethernet |
| Number of positions | 8 |
| Shielded | yes |
| Shielding | Advanced Shielding Technology |
| Signal type/category | Ethernet $CAT6_A$ (IEC 11801), 10 Gbps |
| Insertion/withdrawal cycles | ≥ 100 |
| Insulation resistance | ≥ 100 MΩ |
| Overvoltage category | II |
| Degree of pollution | 3 |
| Material Contact | CuZn |

| | |
|---|---|
| Material Contact surface | Ni/Au |
| Material Contact carrier | PA 6.6 |
| Material Grip body | TPU, hardly inflammable, self-extinguishing |
| Material Seal | FKM |
| Flammability rating according to UL 94 | V0 |
| Ambient temperature (operation) | -25 °C ... 85 °C |
| Standard designation | M12 connector |
| Standards/regulations | IEC 61076-2-010 |

Connection 2

| | |
|---|---|
| Dimensional drawing | 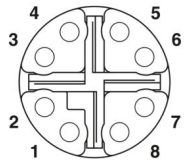<br>Pin assignment of M12 socket, 8-pos., X-coded, socket side view |
| Type | M12 Socket, straight, 8-position, shielded (Advanced Shielding Technology), Push Pull, Keying: X, Ethernet |
| Number of positions | 8 |
| Shielded | yes |
| Shielding | Advanced Shielding Technology |
| Signal type/category | Ethernet $CAT6_A$ (IEC 11801), 10 Gbps |
| Insertion/withdrawal cycles | ≥ 100 |
| Insulation resistance | ≥ 100 MΩ |
| Overvoltage category | II |
| Degree of pollution | 3 |
| Material Contact | CuZn |
| Material Contact surface | Ni/Au |
| Material Contact carrier | PA 6.6 |
| Material Grip body | TPU, hardly inflammable, self-extinguishing |
| Material Seal | FKM |
| Flammability rating according to UL 94 | V0 |
| Ambient temperature (operation) | -25 °C ... 85 °C |
| Standard designation | M12 connector |
| Standards/regulations | IEC 61076-2-010 |

## Cable/line

| | |
|---|---|
| Cable length | 1 m |

Ethernet 10 Gbit [94F]

| | |
|---|---|
| Dimensional drawing | 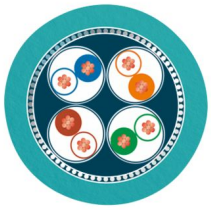 |
| UL AWM Style | 21238 (80 °C / 600 V) |
| Number of positions | 8 |
| Shielded | yes |
| Cable type | Ethernet 10 Gbit [94F] |
| Conductor structure | 4x2xAWG26/7; S/FTP |
| AWG signal line | 26 |
| Conductor cross-section | 4x 2x 0.14 mm² |
| Wire diameter incl. insulation | 1 mm ±0.05 mm |
| External cable diameter | 6.40 mm ±0.2 mm |
| Outer sheath, material | PUR |
| External sheath, color | water blue RAL 5021 |
| Conductor material | Bare Cu litz wires |
| Material wire insulation | Foamed PE |
| Single wire, color | white/blue-blue, white/orange-orange, white/green-green, white/brown-brown |
| Twisted pairs | 2 cores to the pair |
| Overall twist | 4 pairs for core |
| Optical shield covering | 70 % |
| Insulation resistance | ≥ 500 MΩ*km |
| Loop resistance | ≤ 290.00 Ω/km |
| Wave impedance | 100 Ω ±5 Ω (at 100 MHz) |
| Nominal voltage, cable | ≤ 100 V |
| Test voltage Core/Core | 2000 V (50 Hz, 1 min.) |
| Test voltage Core/Shield | 2000.00 V (50 Hz, 1 min.) |
| Minimum bending radius, fixed installation | 4 x D |
| Minimum bending radius, flexible installation | 8 x D |
| Smallest bending radius, fixed installation | 26 mm |
| Smallest bending radius, movable installation | 51 mm |
| Halogen-free | according to IEC 60754-1 |
| Flame resistance | according to IEC 60332-1-2 |
| | in accordance with UN ECE-R 118.03 |
| | according to CSA C 22.2 No. 210-FT1 |
| Resistance to oil | in accordance with DIN EN 60811-404 |
| Ambient temperature (operation) | -40 °C ... 80 °C (cable, fixed installation) |
| | -20 °C ... 80 °C (Cable, flexible installation) |

## Environmental and real-life conditions

### Ambient conditions

| | |
|---|---|
| Degree of protection | IP65/IP67 |
| Specification | IEC 60512-6-4:2002-02 |
| | IEC 60512-1-1:2002-02 |
| | IEC 60512-2-1:2002-02 |
| | IEC 60512-2-5:2003-05 |
| Contact disturbance requirement | Duration of the disturbance: max. 1 µs |
| Requirements, Contact resistance | Resistance difference ΔR ≤ 15 mΩ (for each channel) |
| Requirements, visual check | No defects that impair normal functionality. |
| Lowest frequency | 10 Hz |
| Highest frequency | 500 Hz |
| Amplitude | 0.35 mm |
| Acceleration | 5g |
| Sweep speed | 1 octave/min |
| No. of cycles | 10 |
| Test directions | X-, Y- and Z-axis |

### Shock

| | |
|---|---|
| Specification | IEC 60512-6-3:2002-02 |
| | IEC 60512-1-1:2002-02 |
| | IEC 60512-2-1:2002-02 |
| | IEC 60512-2-5:2003-05 |
| Contact disturbance requirement | Duration of the disturbance: max. 1 µs |
| Requirements, Contact resistance | Resistance difference ΔR ≤ 15 mΩ (for each channel) |
| Requirements, visual check | No defects that impair normal functionality. |
| Acceleration | 50g |
| Test directions | X-, Y- and Z-axis |
| Pulse shape | Half-sine |
| Number of shocks per direction | 3 |
| Duration of the nominal shock | 11 ms |
| Specification | IEC 60512-11-4:2002-02 |
| | IEC 60512-1-1:2002-02 |
| | IEC 60512-2-1:2002-02 |
| | IEC 60512-3-1:2002-02 |
| | IEC 60512-4-1:2003-05 |
| Requirements, Contact resistance | Resistance difference ΔR ≤ 15 mΩ (for each channel) |
| Requirements, insulation resistance | $R_i$ ≥ 100 MΩ |
| Requirements, dielectric strength | There must be no electrical flashovers or disruptive charges for the duration of the test.<br>The maximum permissible leakage current must not be exceeded. |
| Requirements, visual check | No defects that impair normal functionality. |
| No. of cycles | 5 |

| | |
|---|---|
| Dwell time | 30 min |
| Transition duration | ≤ 10 s |
| Minimum temperature | -40 °C |
| Maximum temperature | +85 °C |
| Additional text | The values specified apply to all repetitions of the same test within the normative test sequence. |
| Specification | IEC 60512-11-9:2002-02 |
| | IEC 60512-1-1:2002-02 |
| | IEC 60512-3-1:2002-02 |
| Requirements, insulation resistance | $R_I$ ≥ 100 MΩ |
| Requirements, visual check | No defects that impair normal functionality. |
| Test duration | 16 h |
| Temperature for testing | 85 °C |
| Specification | IEC 60512-11-12:2002-02 |
| | IEC 60512-1-1:2002-02 |
| Requirements, visual check | No defects that impair normal functionality. |
| Test duration | 12 h + 12 h |
| Temperature for testing | 25 °C |
| Test procedure | Db |
| Specification | IEC 60512-11-10:2002-02 |
| | IEC 60512-1-1:2002-02 |
| Requirements, visual check | No defects that impair normal functionality. |
| Test duration | 6 h |
| Temperature for testing | -40 °C |
| Specification | IEC 60512-11-12:2002-02 |
| | IEC 60512-1-1:2002-02 |
| | IEC 60512-2-1:2002-02 |
| | IEC 60512-3-1:2002-02 |
| | IEC 60512-4-1:2003-05 |
| | IEC 60512-13-2:2006-02 |
| Requirements, Contact resistance | Resistance difference ΔR ≤ 15 mΩ (for each channel) |
| Requirements, insulation resistance | $R_I$ ≥ 100 MΩ |
| Requirements, dielectric strength | There must be no electrical flashovers or disruptive charges for the duration of the test.<br>The maximum permissible leakage current must not be exceeded. |
| Requirements, insertion and withdrawal forces | Maximum permissible insertion force $F_{insertion}$ < 30 N<br>Maximum permissible withdrawal force $F_{withdrawal}$ < 30 N |
| Requirements, visual check | No defects that impair normal functionality. |
| Test duration | 24 h |
| Temperature for testing | 25 °C |
| Specification | IEC 60512-1-1:2002-02 |
| | IEC 60512-3-1:2002-02 |
| | IEC 60512-4-1:2003-05 |
| Requirements | Water that is sprayed against the housing as a jet from any direction must not have any harmful effect. |

| | |
|---|---|
| Requirements, insulation resistance | $R_I \geq 100\ M\Omega$ |
| Requirements, dielectric strength | There must be no electrical flashovers or disruptive charges for the duration of the test.<br>The maximum permissible leakage current must not be exceeded. |
| Requirements, visual check | No defects that impair normal functionality. |
| Test duration | 1 min/m²<br>at least 3 min |
| Additional text | The values specified apply to all repetitions of the same test within the normative test sequence. |
| Specification | IEC 60512-1-1:2002-02 |
| | IEC 60512-3-1:2002-02 |
| | IEC 60512-4-1:2003-05 |
| Requirements | Water must not penetrate in a harmful quantity when the housing is temporarily submerged in water under standard pressure and time conditions. |
| Requirements, insulation resistance | $R_I \geq 100\ M\Omega$ |
| Requirements, dielectric strength | There must be no electrical flashovers or disruptive charges for the duration of the test.<br>The maximum permissible leakage current must not be exceeded. |
| Requirements, visual check | No defects that impair normal functionality. |
| Test duration | 30 min |
| Additional text | The values specified apply to all repetitions of the same test within the normative test sequence. |
| Specification | IEC 60512-1-1:2002-02 |
| | IEC 60512-2-1:2002-02 |
| | IEC 60512-3-1:2002-02 |
| | IEC 60512-13-2:2006-02 |
| Requirements | Dust must not enter the housing. |
| Requirements, Contact resistance | Resistance difference ΔR ≤ 15 mΩ (for each channel) |
| Requirements, insertion and withdrawal forces | Maximum allowable insertion force $F_{insertion} < 23\ N$<br>Maximum allowable withdrawal force $F_{withdrawal} < 30\ N$ |
| Requirements, visual check | No defects that impair normal functionality. |
| Test duration | 8 h |
| Additional text | The values specified apply to all repetitions of the same test within the normative test sequence. |
| Specification | IEC 60512-13-5:2006-02 |
| Requirements | No damage that can impair normal functionality.<br>Connectors must only be able to be plugged in when they are in the correct position and combination. The design must prevent mismatching. Polarization prevents incorrect electrical contact. |
| Insertion force | 1,5 x mating force; at least 35 N |
| Specification | IEC 60512-9-1:2010-03 |
| | IEC 60512-1-1:2002-02 |
| | IEC 60512-2-1:2002-02 |
| Requirements, Contact resistance | Resistance difference ΔR ≤ 15 mΩ (for each channel) |
| Requirements, visual check | No defects that impair normal functionality. |

| | |
|---|---|
| No. of cycles | 50 |
| Specification | IEC 60512-11-7:2003-05 |
| Requirements | No damage (corrosion) to the metal body that impairs normal functionality. |
| Requirements, Contact resistance | Resistance difference ΔR ≤ 15 mΩ (for each channel) |
| Test duration | 4 days |
| Test procedure | Method 4 |
| Specification | IEC 60512-9-1:2010-03 |
| Requirements, Contact resistance | Resistance difference ΔR ≤ 15 mΩ (for each channel) |
| Requirements, insulation resistance | $R_I$ ≥ 100 MΩ |
| Requirements, dielectric strength | There must be no electrical flashovers or disruptive charges for the duration of the test.<br>The maximum permissible leakage current must not be exceeded. |
| Requirements, visual check | No defects that impair normal functionality. |
| No. of cycles | 50 |
| Specification | IEC 60512-9-1:2010-03 |
| | IEC 60512-1-1:2002-02 |
| | IEC 60512-2-1:2002-02 |
| Requirements, Contact resistance | Resistance difference ΔR ≤ 15 mΩ (for each channel) |
| Requirements, visual check | No defects that impair normal functionality. |
| No. of cycles | 100 |
| Requirements | No change in the material properties that would limit the intended use. |
| Test duration | 24 h |
| Temperature for testing | +85 °C ±2 °C |
| Test liquid | IRM 902 |
| Specification | IEC 61373:2010-05 |
| | IEC 60512-1-1:2002-02 |
| | IEC 60512-2-1:2002-02 |
| Contact disturbance requirement | Duration of the disturbance: max. 1 µs |
| Requirements, Contact resistance | Resistance difference ΔR ≤ 15 mΩ (for each channel) |
| Requirements, visual check | No defects that impair normal functionality. |
| Acceleration | 5g |
| Test directions | X-, Y- and Z-axis |
| Category | 1 |
| Pulse shape | Half-sine |
| Number of shocks per direction | 3 |
| Shock duration | 30 ms |
| Specification | IEC 61373:2010-05 |
| | IEC 60512-1-1:2002-02 |
| | IEC 60512-2-1:2002-02 |
| Contact disturbance requirement | Duration of the disturbance: max. 1 µs |
| Requirements, Contact resistance | Resistance difference ΔR ≤ 15 mΩ (for each channel) |
| Requirements, visual check | No defects that impair normal functionality. |

| | |
|---|---|
| Acceleration | 30g |
| Test directions | X-, Y- and Z-axis |
| Category | 2 |
| Pulse shape | Half-sine |
| Number of shocks per direction | 3 |
| Shock duration | 18 ms |
| Specification | IEC 61373:2010-05 |
| | IEC 60512-1-1:2002-02 |
| | IEC 60512-2-1:2002-02 |
| Contact disturbance requirement | Duration of the disturbance: max. 1 µs |
| Requirements, Contact resistance | Resistance difference ΔR ≤ 15 mΩ (for each channel) |
| Requirements, visual check | No defects that impair normal functionality. |
| Lowest frequency | 5 Hz |
| Highest frequency | 150 Hz |
| Test directions | X-, Y- and Z-axis |
| Category | 1 |
| Class | B |

## Electrical tests

| | |
|---|---|
| Specification | IEC 60512-2-1:2002-02 |
| Requirements | Resistance difference ΔR ≤ 15 mΩ (for each channel)<br>$R_{max}$ - $R_{wire}$ ≤ 10 mΩ (for each channel)<br>$R_{shield}$ - $R_{cableshield}$ ≤ 100 mΩ |
| Test current | 0.1 A |
| Additional text | The values specified apply to all repetitions of the same test within the normative test sequence. |
| Specification | IEC 60512-3-1:2002-02 |
| Requirements, insulation resistance | $R_I$ ≥ 100 MΩ |
| Additional text | The values specified apply to all repetitions of the same test within the normative test sequence. |
| Specification | IEC 60512-4-1:2003-05 |
| Requirements, dielectric strength | There must be no electrical flashovers or disruptive charges for the duration of the test.<br>The maximum permissible leakage current must not be exceeded. |
| Test voltage | 0.5 kV AC |
| Test duration | 60 s |
| Additional text | The values specified apply to all repetitions of the same test within the normative test sequence. |
| Specification | IEC 60512-9-2:2011-11 |
| | IEC 60512-1-1:2002-02 |
| | IEC 60512-2-1:2002-02 |
| | IEC 60512-3-1:2002-02 |
| | IEC 60512-4-1:2003-05 |
| Requirements | The sum of the ambient temperature and temperature rise of a connector must not exceed the upper limiting temperature. |
| Requirements, Contact resistance | Resistance difference ΔR ≤ 15 mΩ (for each channel) |

| | |
|---|---|
| Requirements, insulation resistance | $R_I \geq 100\ M\Omega$ |
| Requirements, dielectric strength | There must be no electrical flashovers or disruptive charges for the duration of the test.<br>The maximum permissible leakage current must not be exceeded. |
| Requirements, visual check | No defects that impair normal functionality. |
| Test current | 0.5 A |
| Test duration | 1000 h |
| Temperature for testing | 40 °C |
| Upper limiting temperature | 85 °C |
| Specification | IEC 60352-2:2006-02 |
| Connection method | Crimp connections |

Data integrity NEXT (Near End Cross Talk)

| | |
|---|---|
| Specification | ISO/IEC 11801-1:2017-11 (following) |
| Requirements | The limits for the data transmission category set out in the specification must not be exceeded. |

Data integrity RL (Return Loss)

| | |
|---|---|
| Specification | ISO/IEC 11801-1:2017-11 (following) |
| Requirements | The limits for the data transmission category set out in the specification must not be exceeded. |

## Mechanical tests

| | |
|---|---|
| Specification | IEC 60512-1-1:2002-02 |
| Requirements, visual check | No defects that impair normal functionality. |
| Additional text | The values specified apply to all repetitions of the same test within the normative test sequence. |

Dimensional examination

| | |
|---|---|
| Specification | IEC 60512-1-2:2002-02 |
| Requirements | All individual parts have been approved for the current revision status. |
| Specification | IEC 60512-13-2:2006-02 |
| Requirements, insertion and withdrawal forces | Maximum permissible insertion force $F_{insertion} < 30$ N<br>Maximum permissible withdrawal force $F_{withdrawal} < 30$ N |
| Additional text | The values specified apply to all repetitions of the same test within the normative test sequence. |
| Specification | IEC 60512-16-5:2008-07 |
| Requirements | After 3 matings with the maximum gauge, the tested contacts must still be able to hold the minimum gauge. |
| Additional text | The values specified apply to all repetitions of the same test within the normative test sequence. |

## Drawings

Dimensional drawing

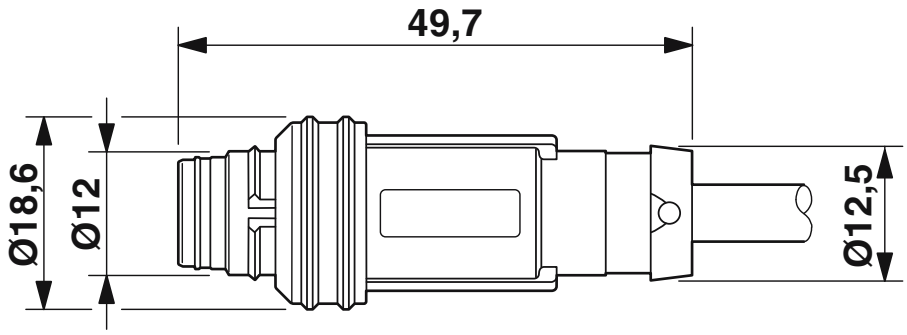


M12 push-pull male connector, straight

Dimensional drawing

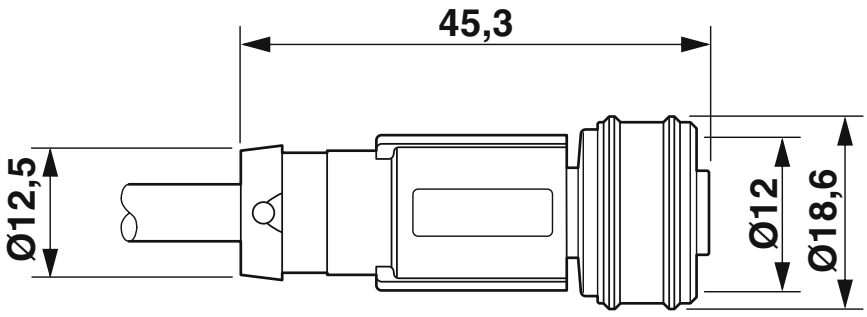


M12 push-pull female connector, straight

Circuit diagram

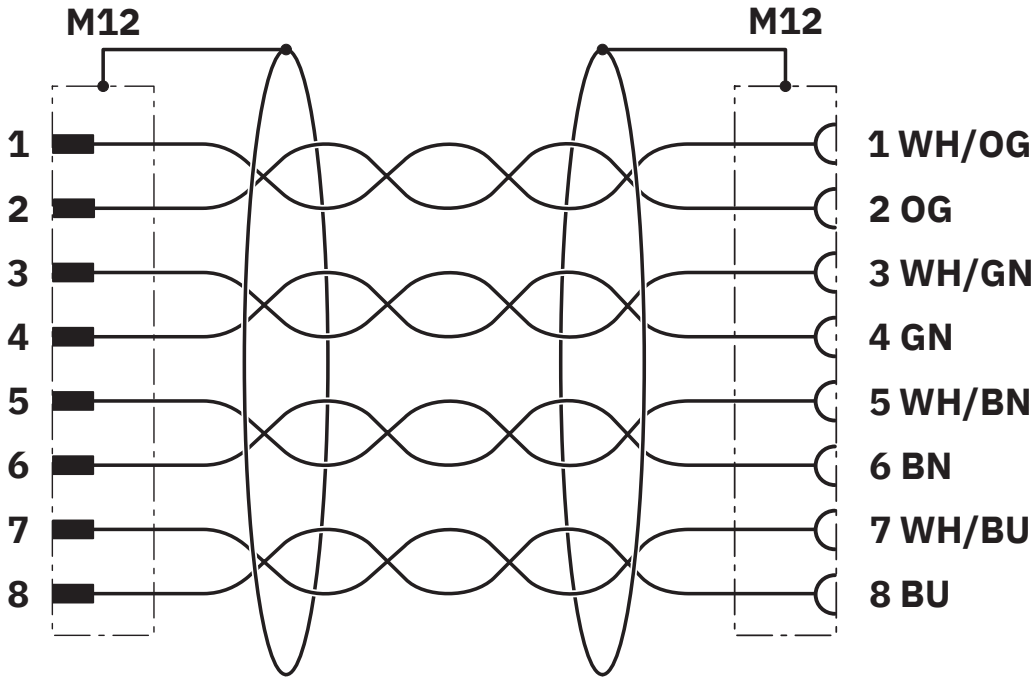


Contact assignment of the M12 plugs

## Classifications

### ECLASS

| | |
|---|---|
| ECLASS-13.0 | 27060307 |
| ECLASS-15.0 | 27060307 |

### ETIM

| | |
|---|---|
| ETIM 10.0 | EC002599 |

## Environmental product compliance

EU RoHS

| | |
|---|---|
| Fulfills EU RoHS substance requirements | Yes, No exemptions |

China RoHS

| | |
|---|---|
| Environment friendly use period (EFUP) | EFUP-E |
| | No hazardous substances above the limits |

EU REACH SVHC

| | |
|---|---|
| REACH candidate substance (CAS No.) | No substance above 0.1 wt% |


Phoenix Contact 2026 © - all rights reserved
https://www.phoenixcontact.com



Phoenix Contact USA
586 Fulling Mill Road
Middletown, PA 17057, United States
(+717) 944-1300
info@phoenixcon.com