QPD W 4PE2,5 9-16 M25 FC GY - Panel feed-through

1582575

https://www.phoenixcontact.com/us/products/1582575

Please be informed that the data shown in this PDF document is generated from our online catalog. Please find the complete data in the user documentation. Our general terms of use for downloads are valid.



Panel feed-through, connection method: Spade connection (For slip-on sleeves according to DIN 46247-2)/ IDC connection, number of positions: 4+PE, M25, Pin, 1 mm^2 ... 2.5 mm^2, 690 V, 20 A, PA, gray, with QUICKON nut, coding: coded, external cable diameter: 9 mm ... 16 mm

Commercial data

Item number	1582575
Packing unit	1 pc
Minimum order quantity	1 pc
Sales key	BF50
Product key	AF6ACB
GTIN	4046356662062
Weight per piece (including packing)	56.5 g
Weight per piece (excluding packing)	56.4 g
Customs tariff number	85366990
Country of origin	PL

Technical data

Product properties

Product type	Panel feed-through
Product family	QPD
Type	QPD 5x2,5
Number of positions	5
Connection profile	4+PE
Position marking	1, 2, L, N, PE
Number of connections	10
Number of connections per position	1
Coding	coded

Insulation characteristics

Overvoltage category	III
Degree of pollution	3

Connection data

Connection technology

Connection method On the device side	Spade connection (For slip-on sleeves according to DIN 46247-2)
Connection method On the field side	IDC connection
Frequency of connections between conductors of the same cross section	max. 10

Conductor connection

Conductor cross-section flexibel	1 mm² ... 2.5 mm²
Conductor cross-section solid	1 mm² ... 2.5 mm²
Connection cross section AWG	16 ... 14
Tightening torque Union nut	10 Nm
Tightening torque Locking nut	5 Nm
Wrench size Union nut	27 mm
Wrench size Locking nut	30 mm

Dimensions

Dimensional drawing	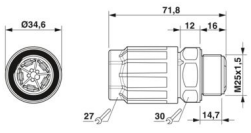
Width	34.6 mm
Height	34.6 mm
Length	71.8 mm
Diameter	34.6 mm
Wrench size	30 mm

Wrench size for mounting	30 mm
Dimensions of slip-on connection	4.8 x 0.8 mm

Electrical properties

Rated surge voltage (II/2)	8 kV
Rated surge voltage (III/2)	8 kV
Rated surge voltage (III/3)	6 kV
Rated current	20 A
Contact resistance	< 3 mΩ
rated voltage (II/2)	1250 V
rated voltage (III/2)	1000 V
Rated voltage (III/3)	690 V (With insulating sleeve PT/FS 4,8, 1670497 without insulating sleeve 250 V.)
Nominal voltage U_N	690 V AC
	690 V DC
Nominal current I_N	20 A

Mechanical properties

Mechanical data

Insertion/withdrawal cycles	max. 50

Material specifications

Color	light gray (RAL 7035)
Material Housing	PA
Material Contact	Cu
Material Contact surface	silver-plated
Material Seal	NBR
Flammability rating according to UL 94	V0
Material wire insulation	PVC/PE/TPE/rubber

Cable/line

Structure of individual litz in acc. with VDE 0295 / smallest wire diameter	VDE 0295 class 1 to 6/min. 0.15 mm
External cable diameter	9 mm ... 16 mm
Wire diameter including insulation	2 mm ... 3.8 mm
Position marking	1, 2, L, N, PE
Material wire insulation	PVC/PE/TPE/rubber

Mounting

Mounting type	Front mounting M25

Environmental and real-life conditions

Ambient conditions

	IP66

Degree of protection	IP68 (2 m / 24 h)
	IP69K
	Touch-proof when not plugged in (IP2X)
Impact strength	IK07
Ambient temperature (operation)	-40 °C ... 100 °C
Temperature when conductor connected	-5 °C ... 50 °C
Ambient temperature (storage/transport)	-40 °C ... 80 °C

Drawings

Dimensional drawing

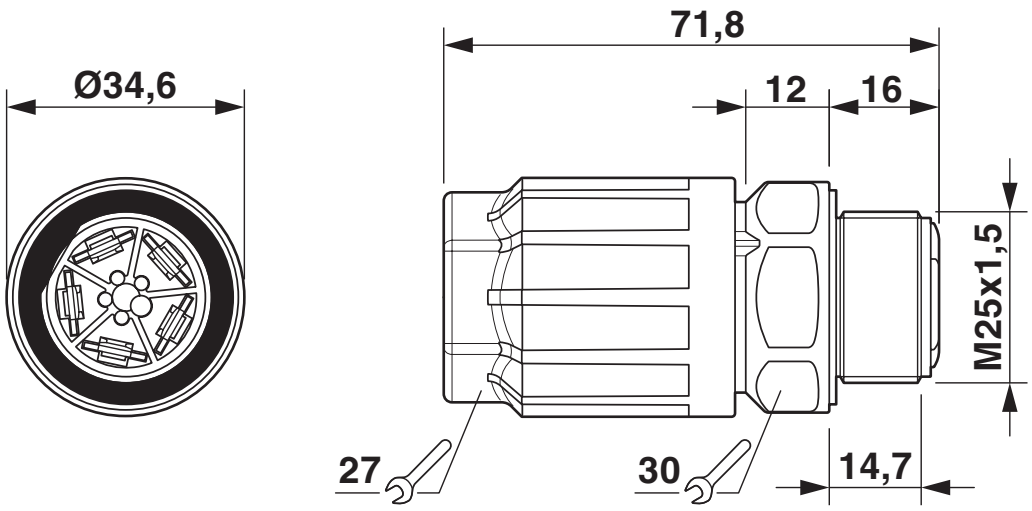

QPD W 4PE2.5 M25 dimensional drawing

Dimensional drawing

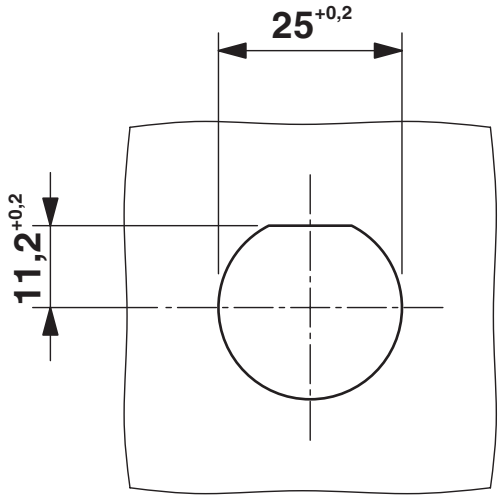

Panel cutout

Approvals

To download certificates, visit the product detail page: https://www.phoenixcontact.com/us/products/1582575

IECEE CB Scheme
Approval ID: DE1-65875

DNV GL
Approval ID: TAE00003J5

VDE Zeichengenehmigung
Approval ID: 40029149

UL Listed
Approval ID: E468743

	Nominal voltage U_N	Nominal current I_N	Cross section AWG	Cross section mm^2
keine				
	600 V	10 A	- 14	- 14

cUL Listed
Approval ID: E468743

	Nominal voltage U_N	Nominal current I_N	Cross section AWG	Cross section mm^2
keine				
	600 V	10 A	- 14	-

Classifications

ECLASS

ECLASS-13.0	27440602
ECLASS-15.0	27440602

ETIM

ETIM 10.0	EC002566

UNSPSC

UNSPSC 21.0	39121500

Environmental product compliance

EU RoHS

Fulfills EU RoHS substance requirements	Yes, No exemptions

China RoHS

Environment friendly use period (EFUP)	EFUP-E
	No hazardous substances above the limits

EU REACH SVHC

REACH candidate substance (CAS No.)	No substance above 0.1 wt%

Phoenix Contact 2026 © - all rights reserved
https://www.phoenixcontact.com

Phoenix Contact USA
586 Fulling Mill Road
Middletown, PA 17057, United States
(+717) 944-1300
info@phoenixcon.com