# QPD W 4PE2,5 M25 1,0 BK - Panel feed-through

1582566

https://www.phoenixcontact.com/us/products/1582566

Please be informed that the data shown in this PDF document is generated from our online catalog. Please find the complete data in the user documentation. Our general terms of use for downloads are valid.



Panel feed-through, connection method: Single wires (Welded-on), number of positions: 4+PE, M25, Pin, 1 $mm^2$ ... 2.5 $mm^2$, 690 V, 20 A, PA, black, without QUICKON nut, coding: coded, 2.5 $mm^2$, wires cut flat at the end, cable length: 1 m

## Your advantages

- Innovative and time saving - QUICKON fast connection for time saving of up to 80 % for on-site connection
- Robust throughout: housing with IP68/IP69K and IK07 protection for a wide range of applications
- Safer connection with mechanical coding to protect against mismatching, and touch-proof protection in accordance with DIN EN 0105
- Efficient - by using panel feed-throughs, devices no longer need to be opened in order to connect cables

## Commercial data

| | |
|---|---|
| Item number | 1582566 |
| Packing unit | 1 pc |
| Minimum order quantity | 1 pc |
| Sales key | BF50 |
| Product key | AF6ACB |
| GTIN | 4046356661997 |
| Weight per piece (including packing) | 187.1 g |
| Weight per piece (excluding packing) | 49.81 g |
| Customs tariff number | 85444290 |
| Country of origin | PL |

## Technical data

### Product properties

| | |
|---|---|
| Product type | Panel feed-through |
| Product family | QPD |
| Type | QPD 5x2,5 |
| Number of positions | 5 |
| Connection profile | 4+PE |
| Position marking | 1, 2, 3, N, PE |
| Number of connections | 10 |
| Number of connections per position | 1 |
| Coding | coded |

Insulation characteristics

| | |
|---|---|
| Overvoltage category | III |
| Degree of pollution | 3 |

### Connection data

Connection technology

| | |
|---|---|
| Connection method On the device side | Single wires (Welded-on) |
| Frequency of connections between conductors of the same cross section | max. 10 |

Conductor connection

| | |
|---|---|
| Conductor cross-section flexibel | 1 mm² ... 2.5 mm² |
| Conductor cross-section solid | 1 mm² ... 2.5 mm² |
| Connection cross section AWG | 16 ... 14 |
| Tightening torque Union nut | 10 Nm |
| Tightening torque Locking nut | 5 Nm |
| Wrench size Union nut | 27 mm |
| Wrench size Locking nut | 30 mm |

Connection assignment

| | |
|---|---|
| Contact \| Color (signal designation) \| Contact (optional) | 1 \| BK |
| | 2 \| BN |
| | 3 \| GY |
| | N \| BU |
| | PE \| GNYE |

### Dimensions

| | |
|---|---|
| Dimensional drawing | 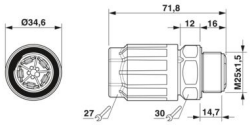 |

| | |
|---|---|
| Width | 34.6 mm |
| Height | 34.6 mm |
| Length | 53 mm |
| Diameter | 34.6 mm |
| Wrench size | 27 mm |
| Wrench size for mounting | 27 mm |

## Electrical properties

| | |
|---|---|
| Rated surge voltage (II/2) | 8 kV |
| Rated surge voltage (III/2) | 8 kV |
| Rated surge voltage (III/3) | 6 kV |
| Rated current | 20 A |
| Contact resistance | < 3 mΩ |
| rated voltage (II/2) | 1000 V |
| rated voltage (III/2) | 1000 V |
| Rated voltage (III/3) | 690 V |
| Nominal voltage $U_N$ | 690 V AC |
| | 690 V DC |
| Nominal current $I_N$ | 20 A |

## Mechanical properties

Mechanical data

| | |
|---|---|
| Insertion/withdrawal cycles | max. 50 |

## Material specifications

| | |
|---|---|
| Color | black (RAL 9005) |
| Material Housing | PA |
| Material Contact | Cu |
| Material Contact surface | silver-plated |
| Flammability rating according to UL 94 | V0 |
| Material wire insulation | PVC/PE/TPE/rubber |

## Cable/line

| | |
|---|---|
| Cable length | 1 m |
| Structure of individual litz in acc. with VDE 0295 / smallest wire diameter | VDE 0295 class 1 to 6/min. 0.15 mm |
| Wire diameter including insulation | 2 mm ... 3.8 mm |
| Position marking | 1, 2, 3, N, PE |
| Single wire, color | black, brown, gray, blue, green/yellow |
| Cable cross section | 2.5 mm² |
| Material wire insulation | PVC/PE/TPE/rubber |

## Mounting

| | |
|---|---|
| Mounting type | Front mounting M25 |

## Environmental and real-life conditions

### Ambient conditions

| | |
|---|---|
| Degree of protection | IP66 |
| | IP68 (2 m / 24 h) |
| | IP69K |
| | Touch-proof when not plugged in (IP2X) |
| Impact strength | IK07 |
| Ambient temperature (operation) | -40 °C ... 100 °C |
| Temperature when conductor connected | -5 °C ... 50 °C |
| Ambient temperature (storage/transport) | -40 °C ... 80 °C |

## Drawings

Dimensional drawing

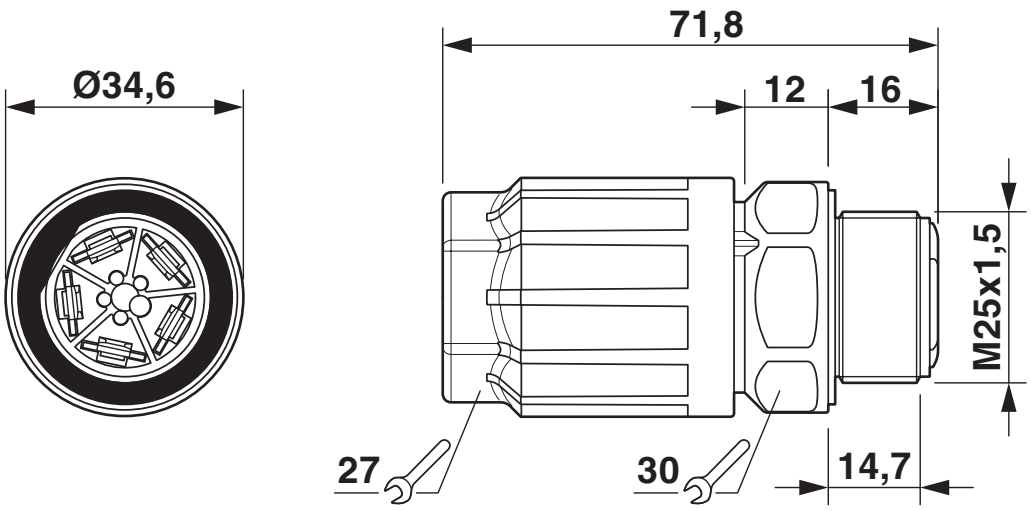


QPD W 4PE2.5 M25 dimensional drawing

Dimensional drawing

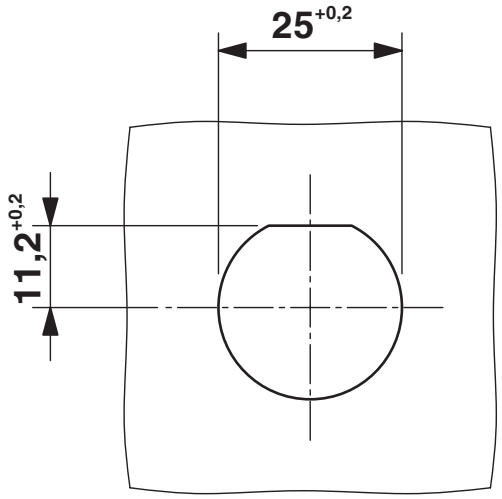


Panel cutout

## Approvals

To download certificates, visit the product detail page: https://www.phoenixcontact.com/us/products/1582566

**IECEE CB Scheme**
Approval ID: DE1-65875

**DNV GL**
Approval ID: TAE00003J5

**VDE Zeichengenehmigung**
Approval ID: 40029149

**UL Listed**
Approval ID: E468743

| | Nominal voltage $U_N$ | Nominal current $I_N$ | Cross section AWG | Cross section $mm^2$ |
|---|---|---|---|---|
| keine | | | | |
| | 600 V | 10 A | - 14 | - 14 |

**cUL Listed**
Approval ID: E468743

| | Nominal voltage $U_N$ | Nominal current $I_N$ | Cross section AWG | Cross section $mm^2$ |
|---|---|---|---|---|
| keine | | | | |
| | 600 V | 10 A | - 14 | - |

## Classifications

### ECLASS

| | |
|---|---|
| ECLASS-13.0 | 27440602 |
| ECLASS-15.0 | 27440602 |

### ETIM

| | |
|---|---|
| ETIM 10.0 | EC002566 |

### UNSPSC

| | |
|---|---|
| UNSPSC 21.0 | 39121500 |

## Environmental product compliance

EU RoHS

| | |
|---|---|
| Fulfills EU RoHS substance requirements | Yes, No exemptions |

China RoHS

| | |
|---|---|
| Environment friendly use period (EFUP) | EFUP-E |
| | No hazardous substances above the limits |

EU REACH SVHC

| | |
|---|---|
| REACH candidate substance (CAS No.) | No substance above 0.1 wt% |

Phoenix Contact 2026 © - all rights reserved
https://www.phoenixcontact.com

Phoenix Contact USA
586 Fulling Mill Road
Middletown, PA 17057, United States
(+717) 944-1300
info@phoenixcon.com