QPD H 3PE2,5 6-10 BK - H distributor

1582145

https://www.phoenixcontact.com/us/products/1582145

Please be informed that the data shown in this PDF document is generated from our online catalog. Please find the complete data in the user documentation. Our general terms of use for downloads are valid.



H distributor, connection method: IDC connection, number of positions: 3+PE, 1 mm^2 ... 2.5 mm^2, 690 V, 20 A, PA, black, with four QUICKON nuts, coding: Coding profile, external cable diameter: 6 mm ... 10 mm, with a sealing bolt

Your advantages

- Innovative and time saving - QUICKON fast connection for time saving of up to 80 % for on-site connection
- Robust throughout: housing with IP68/IP69K and IK07 protection for a wide range of applications
- Safer connection with mechanical coding to protect against mismatching, and touch-proof protection in accordance with DIN EN 0105
- Flexible and compact - by connecting connections internally, H and T distributors can be used to branch master cables or they can be used as star distributors

Commercial data

Item number	1582145
Packing unit	1 pc
Note	Made to order (non-returnable)
Sales key	BF50
Product key	AF6DBB
GTIN	4046356316804
Weight per piece (including packing)	150.1 g
Weight per piece (excluding packing)	150.1 g
Customs tariff number	85366990
Country of origin	DE

Technical data

Mounting

Mounting type	Adapter plate

Product properties

Product type	Power distributor
Product family	QPD
Type	H distributor
Number of positions	4
Connection profile	3+PE
Position marking	1, 2, 3, PE
Number of connections	4
No. of cable outlets	4
Coding	Coding profile

Insulation characteristics

Overvoltage category	III
Degree of pollution	3

Connection data

Connection technology

Connection method	IDC connection
Frequency of connections between conductors of the same cross section	max. 10

Conductor connection

Conductor cross-section flexibel	1 mm² ... 2.5 mm²
Conductor cross-section solid	1 mm² ... 2.5 mm²
Connection cross section AWG	16 ... 14
Tightening torque Union nut	10 Nm
Wrench size Union nut	22 mm

Dimensions

Dimensional drawing	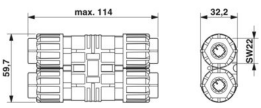
Width	59.7 mm
Height	32.2 mm
Length	114 mm
Wrench size	22 mm
Wrench size for mounting	22 mm

Electrical properties

Rated surge voltage (II/2)	8 kV
Rated surge voltage (III/2)	8 kV
Rated surge voltage (III/3)	6 kV
Rated current	20 A
Contact resistance	< 3 mΩ
rated voltage (II/2)	1000 V
rated voltage (III/2)	1000 V
Rated voltage (III/3)	690 V
Nominal voltage U_N	690 V
Nominal current I_N	20 A

Mechanical properties

Mechanical data

Insertion/withdrawal cycles	max. 50

Material specifications

Color	black (RAL 9005)
Material Housing	PA
Material Contact	Cu
Material Contact surface	silver-plated
Flammability rating according to UL 94	V0
Material wire insulation	PVC/PE/TPE/rubber

Cable/line

Structure of individual litz in acc. with VDE 0295 / smallest wire diameter	VDE 0295 class 1 to 6/min. 0.15 mm
External cable diameter	6 mm ... 10 mm
Wire diameter including insulation	2 mm ... 3.8 mm
Position marking	1, 2, 3, PE
Material wire insulation	PVC/PE/TPE/rubber

Environmental and real-life conditions

Ambient conditions

Degree of protection	IP66
	IP68 (2 m / 24 h)
	IP69K (Distance from the nozzle 150 mm)
Impact strength	IK07 (-25 °C)
Ambient temperature (operation)	-40 °C ... 100 °C
Temperature when conductor connected	-5 °C ... 50 °C
Ambient temperature (storage/transport)	-40 °C ... 100 °C

Drawings

Dimensional drawing

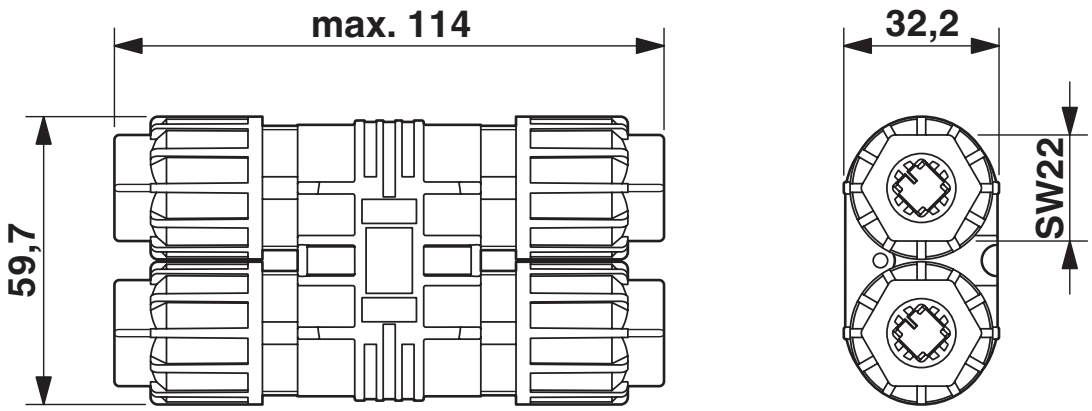

Dimensional drawing

Schematic diagram

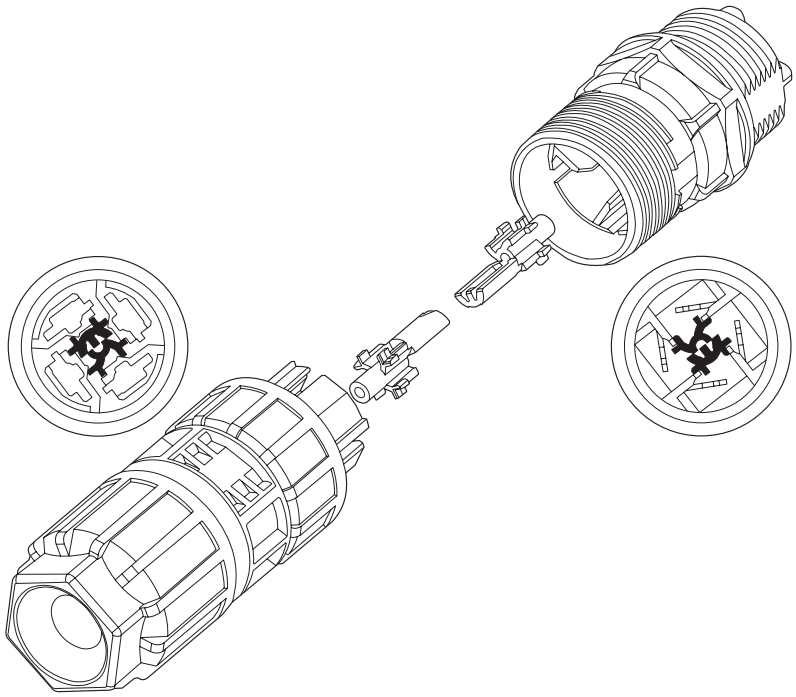

Coding of the QUICKON plug-in connection

Diagram

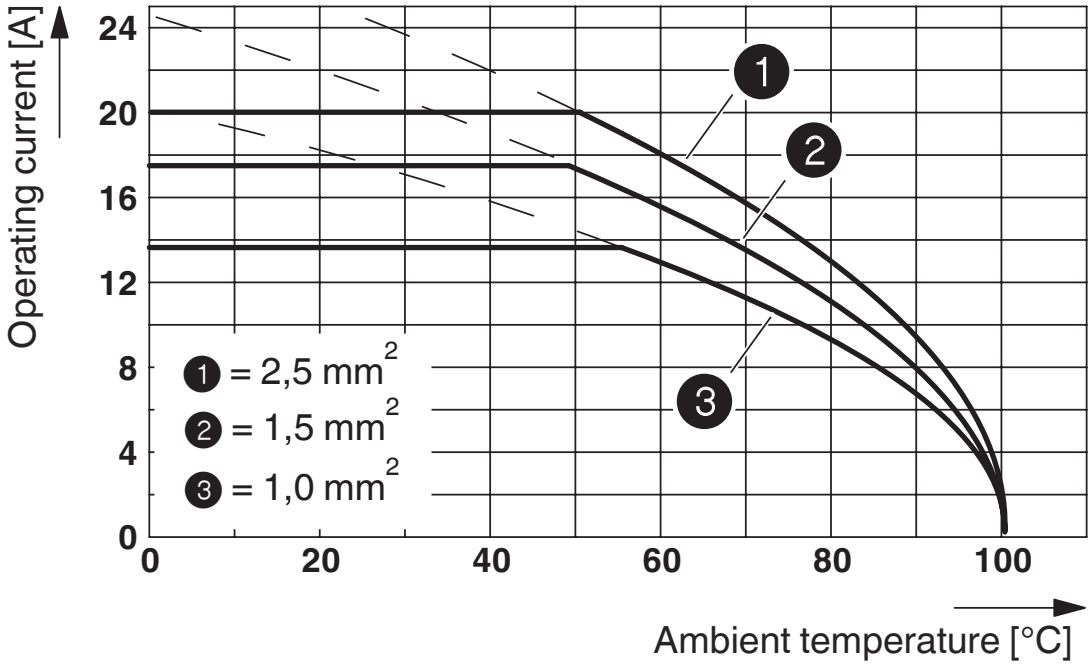

Circuit diagram

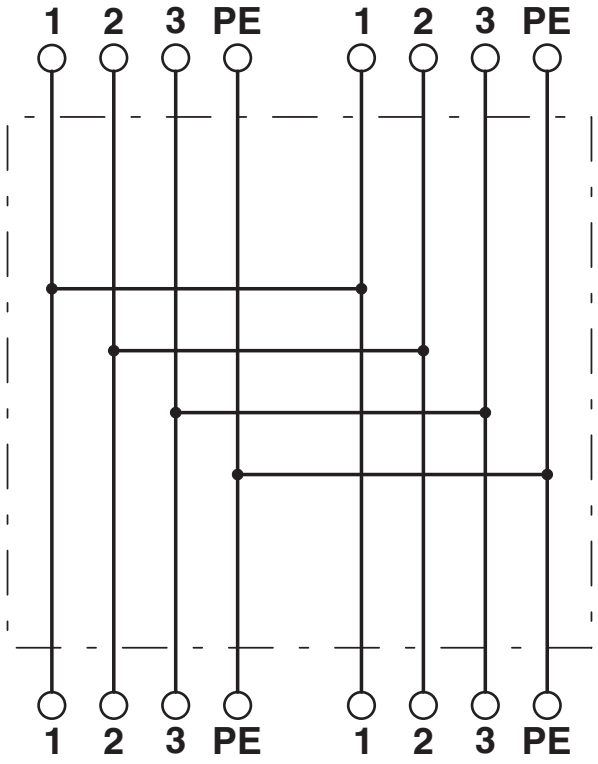

Classifications

ECLASS

ECLASS-13.0	27440603
ECLASS-15.0	27440603

ETIM

ETIM 10.0	EC002567

UNSPSC

UNSPSC 21.0	39121410

Environmental product compliance

EU RoHS

Fulfills EU RoHS substance requirements	Yes, No exemptions

China RoHS

Environment friendly use period (EFUP)	EFUP-E
	No hazardous substances above the limits

EU REACH SVHC

REACH candidate substance (CAS No.)	No substance above 0.1 wt%

Phoenix Contact 2026 © - all rights reserved
https://www.phoenixcontact.com

Phoenix Contact USA
586 Fulling Mill Road
Middletown, PA 17057, United States
(+717) 944-1300
info@phoenixcon.com