SOL-WR-1813-AISI304 - Weather protection cover

1579283

https://www.phoenixcontact.com/us/products/1579283

Please be informed that the data shown in this PDF document is generated from our online catalog. Please find the complete data in the user documentation. Our general terms of use for downloads are valid.



Front view

Canopy to protect the string combiner box (SCB) from environmental influences when installed outdoors, made of stainless steel, with M8 grounding bolt on the back, incl. mounting material for SCB and grounding cable.

Product description

The canopy is available in different sizes. On the SCB product page, the matching canopy can be found in the “Accessories” section.
Mounting material is included in the scope of delivery for fastening the SCB and the grounding cable to the canopy. Suitable mounting material for mounting the canopy on the mounting substrate must be provided by the customer.

Your advantages

- Robust canopy for outdoor use
- Specifically developed for use with Phoenix Contact SCBs
- Quick installation of SCB and grounding cable to the canopy thanks to the enclosed mounting material

Commercial data

Item number	1579283
Packing unit	1 pc
Minimum order quantity	1 pc
Product key	DTHTXA
GTIN	4067923069367
Weight per piece (including packing)	4.15 kg
Weight per piece (excluding packing)	3.8 kg
Country of origin	DE

Technical data

Product properties

Product type	Mounting material

Dimensions

External dimensions

Width / Height / Depth	250 mm / 230 mm / 180 mm

Material specifications

Material	Stainless steel V2A

Environmental and real-life conditions

Ambient conditions

Ambient temperature (operation)	-20 °C ... 55 °C

Drawings

Dimensional drawing

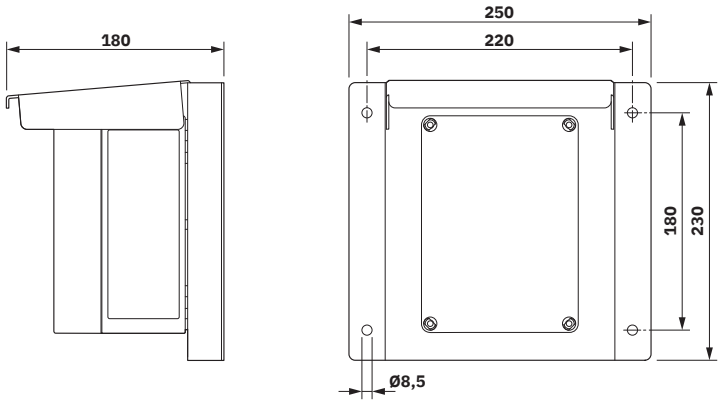

Classifications

ECLASS

ECLASS-13.0	27182807
ECLASS-15.0	27182807

ETIM

ETIM 10.0	EC002625

Environmental product compliance

EU RoHS

Fulfills EU RoHS substance requirements	Yes, No exemptions

China RoHS

Environment friendly use period (EFUP)	EFUP-E
	No hazardous substances above the limits

EU REACH SVHC

REACH candidate substance (CAS No.)	No substance above 0.1 wt%

Phoenix Contact 2026 © - all rights reserved
https://www.phoenixcontact.com

Phoenix Contact USA
586 Fulling Mill Road
Middletown, PA 17057, United States
(+717) 944-1300
info@phoenixcon.com