SAC-5P-10,0-520/M12FS VA - Sensor/actuator cable

1576423

https://www.phoenixcontact.com/us/products/1576423

Please be informed that the data shown in this PDF document is generated from our online catalog. Please find the complete data in the user documentation. Our general terms of use for downloads are valid.

Sensor/actuator cable, 5-position, PVC, gray RAL 7001, free cable end, on Socket straight M12, coding: A, cable length: 10 m

Commercial data

Item number	1576423
Packing unit	5 pc
Minimum order quantity	5 pc
Note	Made to order (non-returnable)
Sales key	BF03
Product key	AF1CDA
GTIN	4046356440684
Weight per piece (including packing)	568 g
Weight per piece (excluding packing)	568 g
Customs tariff number	85444290
Country of origin	PL

Technical data

Product properties

Product type	Sensor/actuator cable
Number of positions	5
No. of cable outlets	1
Shielded	no
Coding	A

Insulation characteristics

Overvoltage category	II
Degree of pollution	3

Material specifications

Flammability rating according to UL 94	HB
Seal material	NBR
Material of grip body	TPU, hardly inflammable, self-extinguishing
Contact material	CuSn
Contact surface material	Ni/Au
Contact carrier material	TPU GF
Material for screw connection	Stainless steel

Electrical properties

Insulation resistance	≥ 100 MΩ
Nominal voltage U_N	48 V AC
	60 V DC
Nominal current I_N	4 A

Mechanical properties

Mechanical data

Insertion/withdrawal cycles	≥ 100

Signaling

Status display	no
Status display present	no

Connector

Connection 1

Type	free cable end

Connection 2

Type	Socket straight M12
Number of positions	5
Coding type	A

Cable/line

Cable length	10 m

PVC gray 5th conductor gray [520]

Dimensional drawing	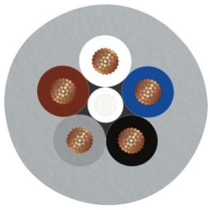
Cable weight	54 kg/km
Number of positions	5
Shielded	no
Cable type	PVC gray 5th conductor gray [520]
Conductor structure signal line	42x 0.10 mm
AWG signal line	22
Conductor cross-section	0.34 mm²
Wire diameter incl. insulation	1.45 mm ±0.02 mm
External cable diameter	5.90 mm ±0.15 mm
Outer sheath, material	PVC
External sheath, color	gray RAL 7001
Conductor material	Bare Cu litz wires
Material, filler	PVC
Material wire insulation	PVC
Single wire, color	brown, white, blue, black, gray
Thickness, insulation	≥ 0.23 mm (Core insulation)
	≥ 0.76 mm (Outer cable sheath)
Overall twist	5 wires around filler to the core
Length of twist, overall twist	55 mm
Max. conductor resistance	max. 58 Ω/km (at 20 °C)
Insulation resistance	≥ 1 GΩ*km (at 20 °C)
Nominal voltage, cable	≤ 300 V
Test voltage	≥ 3000 V
Flame resistance	As per UL-Style 2464
Ambient temperature (operation)	-25 °C ... 80 °C (cable, fixed installation)
	-5 °C ... 80 °C (Cable, flexible installation)

Environmental and real-life conditions

Ambient conditions

Degree of protection	IP65
	IP67

	IP68
	IP69K
Ambient temperature (operation)	-25 °C ... 90 °C (Plug / socket)
	-25 °C ... 80 °C (cable, fixed installation)
	-5 °C ... 80 °C (Cable, flexible installation)

Drawings

Dimensional drawing

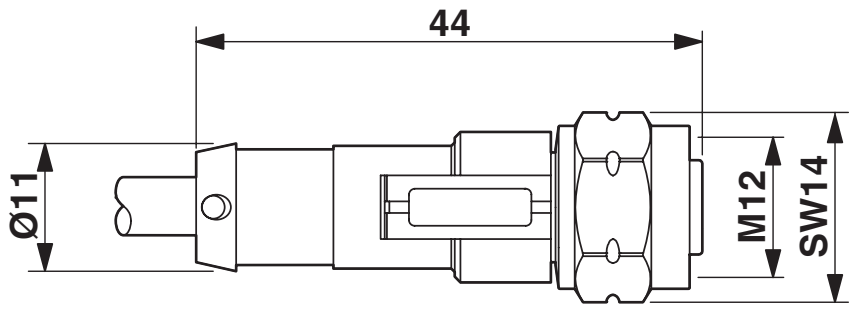

M12 x 1 socket, straight

Schematic diagram

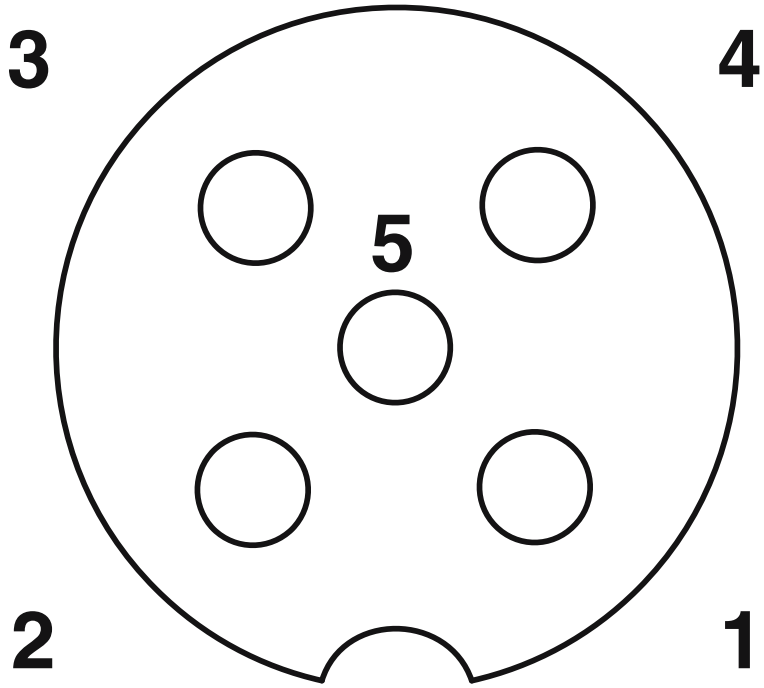

Pin assignment M12 socket, 5-pos., A-coded, socket side view

Approvals

To download certificates, visit the product detail page: https://www.phoenixcontact.com/us/products/1576423

UL Listed
Approval ID: FILE E 221474

	Nominal voltage U_N	Nominal current I_N	Cross section AWG	Cross section mm^2
keine				
	125 V	4 A	-	-

Classifications

ECLASS

ECLASS-13.0	27060311
ECLASS-15.0	27060311

ETIM

ETIM 10.0	EC001855

UNSPSC

UNSPSC 21.0	26121600

Environmental product compliance

EU RoHS

Fulfills EU RoHS substance requirements	Yes, No exemptions

China RoHS

Environment friendly use period (EFUP)	EFUP-E
	No hazardous substances above the limits

EU REACH SVHC

REACH candidate substance (CAS No.)	No substance above 0.1 wt%

EF3.1 Climate Change

CO2e kg	10.318 kg CO2e

Phoenix Contact 2026 © - all rights reserved
https://www.phoenixcontact.com

Phoenix Contact USA
586 Fulling Mill Road
Middletown, PA 17057, United States
(+717) 944-1300
info@phoenixcon.com