PRC 5-FT25-MC6-300 - Device connector rear mounting

1557985

https://www.phoenixcontact.com/us/products/1557985

Please be informed that the data shown in this PDF document is generated from our online catalog. Please find the complete data in the user documentation. Our general terms of use for downloads are valid.

CRIMP



Device connector rear mounting, Range of articles: PRC 35, color: black, number of positions: 5, max. conductor cross-section: 6 mm^2, rated voltage: 690 V AC, rated current: 35 A, Connection method: Crimp connection, This item is also available with other cable lengths. For your specific requirements, please contact your local PHOENIX CONTACT subsidiary.

Your advantages

- Up to 75% smaller in size than industrial connectors with the same rating
- Locking mechanism can be unlocked manually or using a tool
- Ideal for indoor and outdoor use due to weatherproof materials
- Either preassembled or designed for assembly

Commercial data

Item number	1557985
Packing unit	10 pc
Minimum order quantity	250 pc
Product key	ABLCAS
GTIN	4067923036994
Weight per piece (including packing)	128.5 g
Weight per piece (excluding packing)	119.309 g
Country of origin	PL

PRC 5-FT25-MC6-300 - Device connector rear mounting

1557985

https://www.phoenixcontact.com/us/products/1557985

Technical data

Notes

Order information:	This item is also available with other cable lengths. For your specific requirements, please contact your local PHOENIX CONTACT subsidiary.
Note on application	For assembly notes, please refer to the packing slip

Product properties

Product type	Panel feed-through
Product family	PRC 35
Number of positions	5
Connection profile	4+PE
Coding	AD

Insulation characteristics

Protection class	II (double or reinforced insulation)

Connection data

Connection technology

Connection method	Crimp connection

Conductor connection

Tightening torque	2.5 Nm ±0.1 Nm (Tightening torque nut)

Dimensions

Dimensional drawing	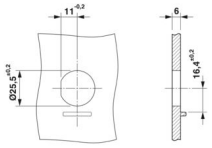
Width	34.5 mm
Height	38.4 mm
Length	329.5 mm

Electrical properties

Rated voltage	690 V AC (III/2) in accordance with IEC 61984
	500 V AC (III/2) in accordance with IEC 61535/2 PfG 1915
	600 V AC / DC (III/2) in accordance with UL 2238 / UL 2237
	500 V DC (III/2) in accordance with IEC 61535
Rated current	35 A (With 6 mm² conductor cross-section in accordance with IEC 61984)
	32 A (With 6 mm² conductor cross-section in accordance with IEC 61535)

	21.4 A (With 6 mm² conductor cross-section and 85 °C in accordance with 2 PfG 1915)
	28 A (with AWG 10, in accordance with UL 2237)

Mechanical properties

Mechanical data

Insertion/withdrawal cycles	100
Insertion force	40 N ±10 N

Material specifications

Color (Housing)	black (RAL 9005)
Material Housing	PPE (Nut)
	PPE
Material Contact carrier	PPE
Material Screw connection	PPE
Material Contact	CuZn (Contact material, Pb < 0.1)
Material Seal	EPDM

Cable/line

Single wire, cross section	6 mm²
Halogen-free	no

Mounting

Mounting type	Rear mounting
Thread type	M25 x 1,5 ()

Environmental and real-life conditions

Ambient conditions

Degree of protection (when plugged in)	IP66/IP68 (2 m / 24 h) IP69K
Degree of protection (not plugged in)	IP65 (Lengthwise waterproofing)
Category of shock impact	IK08 (-25°C)
Ambient temperature (operation)	-40 °C ... 105 °C (Depending on the current carrying capacity/derating curve)
Ambient temperature (storage/transport)	-40 °C ... 70 °C
Ambient temperature (assembly)	5 °C ... 85 °C

Standards and regulations

Standards/specifications	IEC 61984:2008
	EN 61984:2008
	DIN EN IEC 61535:2020
	IEC 61535:2019
	2 PfG 1915/03.2015
	UL 2237 Ed.1:2021-01-08
	CSA C22.2 No. 182.3-16 Ed.2:2019-01

Drawings

Dimensional drawing

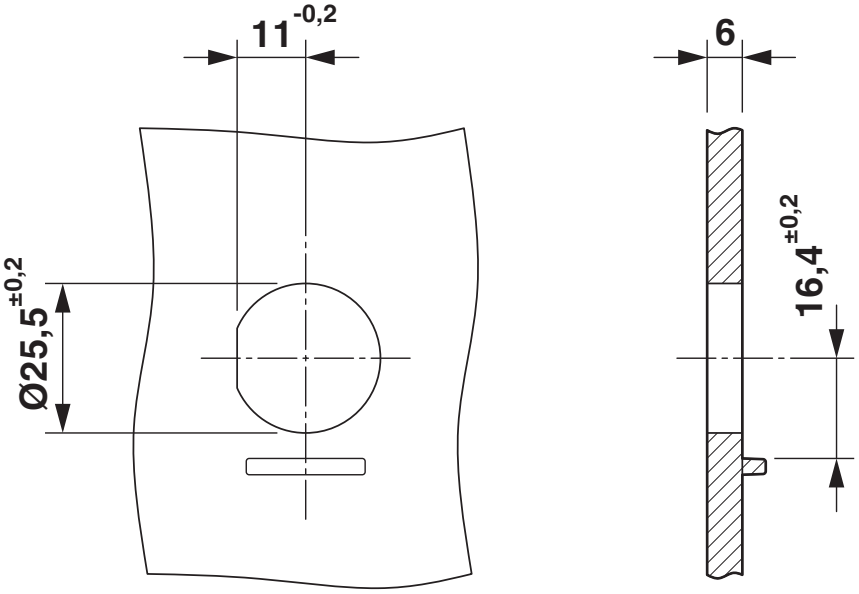

Housing cutout

Schematic diagram

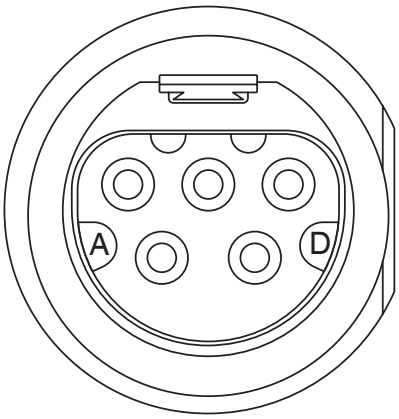

Connector pin assignment

Approvals

To download certificates, visit the product detail page: https://www.phoenixcontact.com/us/products/1557985

UL Listed
Approval ID: E221474-20150513

	Nominal voltage U_N	Nominal current I_N	Cross section AWG	Cross section mm^2
keine				
	600 V	30 A	-	-

cUL Listed
Approval ID: E221474-20150513

	Nominal voltage U_N	Nominal current I_N	Cross section AWG	Cross section mm^2
keine				
	600 V	30 A	-	-

cUL Listed
Approval ID: E468743-20190809

	Nominal voltage U_N	Nominal current I_N	Cross section AWG	Cross section mm^2
keine				
	600 V	24 A	-	-

UL Listed
Approval ID: E468743-20190809

	Nominal voltage U_N	Nominal current I_N	Cross section AWG	Cross section mm^2
keine				
	600 V	30 A	-	-

TÜV Rheinland
Approval ID: R 60168292 0001

	Nominal voltage U_N	Nominal current I_N	Cross section AWG	Cross section mm^2
keine				
	690 V	35 A	-	-

TÜV Rheinland
Approval ID: R 60117908

	Nominal voltage U_N	Nominal current I_N	Cross section AWG	Cross section mm^2
keine				
	500 V	21.4 A	-	-

TÜV Rheinland
Approval ID: R 60168255 0001

	Nominal voltage U_N	Nominal current I_N	Cross section AWG	Cross section mm^2
keine				
	500 V	32 A	-	-

DNV
Approval ID: TAE00002KM

Classifications

ECLASS

ECLASS-13.0	27440602
ECLASS-15.0	27440602

ETIM

ETIM 10.0	EC002566

Environmental product compliance

EU RoHS

Fulfills EU RoHS substance requirements	Yes, No exemptions

China RoHS

Environment friendly use period (EFUP)	EFUP-E
	No hazardous substances above the limits

EU REACH SVHC

REACH candidate substance (CAS No.)	Triphenyl phosphate(CAS: 115-86-6)
SCIP	9cca3cef-4ebf-47c4-97d4-70d311541296

EF3.1 Climate Change

CO2e kg	3.245 kg CO2e

Phoenix Contact 2026 © - all rights reserved
https://www.phoenixcontact.com

Phoenix Contact USA
586 Fulling Mill Road
Middletown, PA 17057, United States
(+717) 944-1300
info@phoenixcon.com