# PROT-M12 FB - Screw plug

1555538

https://www.phoenixcontact.com/us/products/1555538

Please be informed that the data shown in this PDF document is generated from our online catalog. Please find the complete data in the user documentation. Our general terms of use for downloads are valid.



M12 high-grade steel screw plug, for unoccupied M12 sockets of the sensor/actuator cables, boxes and flush-type connectors for the food industry

## Your advantages

- High degree of protection and robustness ensure safe use in the food industry
- Reliable protection of unoccupied slots during transport and use in the field
- Resistant and durable due to the use of corrosion- and acid-resistant V4A stainless steel
- Resistant to commercially available cleaning agents
- Easy to clean, thanks to the special hygienic design
- Easy assembly using a screwdriver

## Commercial data

| | |
|---|---|
| Item number | 1555538 |
| Packing unit | 5 pc |
| Minimum order quantity | 5 pc |
| Sales key | BF46 |
| Product key | AF3ZAX |
| GTIN | 4046356170543 |
| Weight per piece (including packing) | 5.73 g |
| Weight per piece (excluding packing) | 5.4 g |
| Customs tariff number | 73269098 |
| Country of origin | DE |

## Technical data

### Notes

| | |
|---|---|
| General | Use up to max. 48 V AC and 60 V DC |
| General | Not suitable for M12 sockets with K, L, or M coding |

### Product properties

| | |
|---|---|
| Product type | Plug for cable screw gland |
| Thread type | M12 |

### Connection data

| | |
|---|---|
| Tightening torque | 0.4 Nm |

### Dimensions

| | |
|---|---|
| Dimensional drawing | 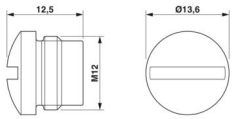 |
| Diameter | 13.6 mm |

### Material specifications

| | |
|---|---|
| Material for screw connection | Stainless steel |

### Environmental and real-life conditions

#### Ambient conditions

| | |
|---|---|
| Degree of protection | IP65 |
| | IP67 |
| | IP69K |

## Drawings

Dimensional drawing

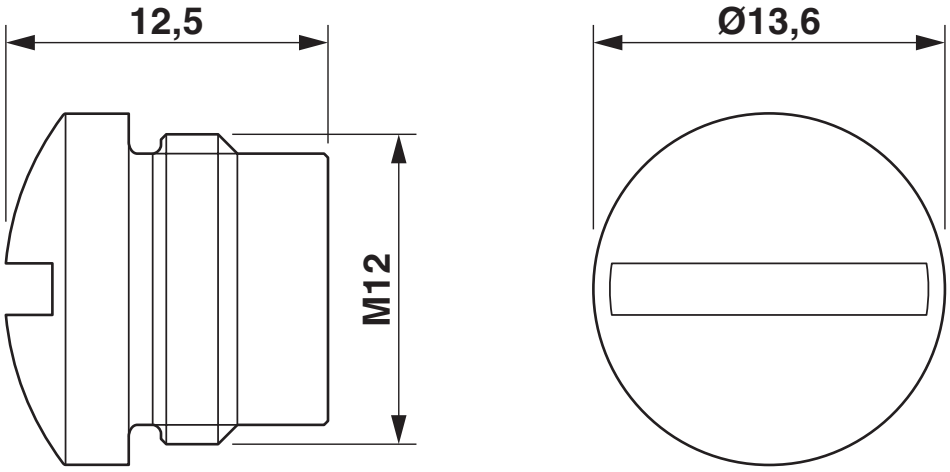

## Classifications

### ECLASS

| | |
|---|---|
| ECLASS-13.0 | 23111190 |
| ECLASS-15.0 | 27440208 |

### ETIM

| | |
|---|---|
| ETIM 10.0 | EC002314 |

### UNSPSC

| | |
|---|---|
| UNSPSC 21.0 | 31261500 |

## Environmental product compliance

EU RoHS

| | |
|---|---|
| Fulfills EU RoHS substance requirements | Yes, No exemptions |

China RoHS

| | |
|---|---|
| Environment friendly use period (EFUP) | EFUP-E |
| | No hazardous substances above the limits |

EU REACH SVHC

| | |
|---|---|
| REACH candidate substance (CAS No.) | No substance above 0.1 wt% |

Phoenix Contact 2026 © - all rights reserved
https://www.phoenixcontact.com

Phoenix Contact USA
586 Fulling Mill Road
Middletown, PA 17057, United States
(+717) 944-1300
info@phoenixcon.com