SACC-V-3CON-PG9/A-GVL 12/24 - Valve connector

1533291

https://www.phoenixcontact.com/us/products/1533291

Please be informed that the data shown in this PDF document is generated from our online catalog. Please find the complete data in the user documentation. Our general terms of use for downloads are valid.



Valve connector, Universal, 3-position, Valve connector A, Screw connection, cable gland Pg9, external cable diameter 6 mm ... 8 mm

Commercial data

Item number	1533291
Packing unit	1 pc
Minimum order quantity	1 pc
Sales key	BF36
Product key	AF2DAA
GTIN	4046356025980
Weight per piece (including packing)	31.78 g
Weight per piece (excluding packing)	31.78 g
Customs tariff number	85366990
Country of origin	HU

Technical data

Notes

Assembly note	NOTE: Observe the permissible bending radii when routing cables, since the degree of protection may be at risk if the bending forces are too high. Reduce mechanical loads upstream of the connector, e.g., by using cable ties.

Product properties

Product type	Valve connectors
Number of positions	3
No. of cable outlets	1
Shielded	no
Pg screw connection	Pg9

Insulation characteristics

Overvoltage category	II
Degree of pollution	3

Material specifications

Flammability rating according to UL 94	HB
Seal material	NBR
Material housing valve plug	PA 6
Contact material	CuSn
Valve plug contact insert material	PA 6
Contact surface material	Ni

Dimensions

External dimensions

Outside diameter	6 mm ... 8 mm

Electrical properties

Insulation resistance	> 100 MΩ
Nominal voltage U_N	24 V AC
	24 V DC
Nominal current I_N	2 A
Protective circuit	Surge protection; Varistor and rectifier

Mechanical properties

Mechanical data

Insertion/withdrawal cycles	50 (Valve connector)

Signaling

Status display	1 LED

Status display present	yes

Connection data

Connection method	Screw connection
Conductor cross-section	0.34 mm² ... 1.5 mm²
Connection cross section AWG	22 ... 16

Connector

Connection 1

Head design	Valve connector
Head thread type	A

Environmental and real-life conditions

Ambient conditions

Degree of protection	IP65
Ambient temperature (operation) (male connector/female connector)	-25 °C ... 85 °C (Valve connector)

Drawings

Dimensional drawing

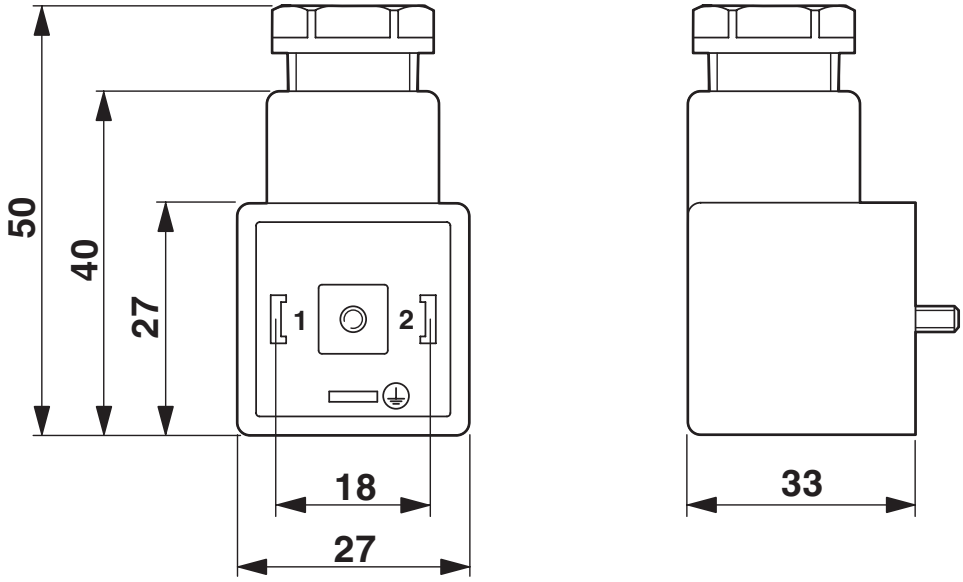

Circuit diagram

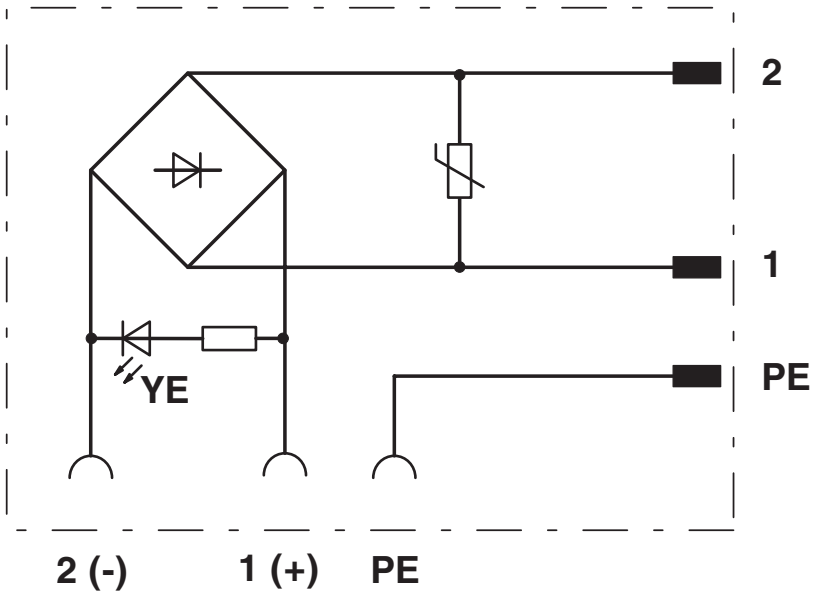

Classifications

ECLASS

ECLASS-13.0	27440105
ECLASS-15.0	27440105

ETIM

ETIM 10.0	EC003623

UNSPSC

UNSPSC 21.0	31251500

Environmental product compliance

EU RoHS

Fulfills EU RoHS substance requirements	Yes
Exemption	6(c)

China RoHS

Environment friendly use period (EFUP)	EFUP-50
	An article-related China RoHS declaration table can be found in the download area for the respective article under "Manufacturer declaration". For all articles with EFUP-E, no China RoHS declaration table issued and required.

EU REACH SVHC

REACH candidate substance (CAS No.)	Lead(CAS: 7439-92-1)
SCIP	65c11391-ca00-46e2-bf00-4b87d8563e58

EF3.1 Climate Change

CO2e kg	2.044 kg CO2e

Phoenix Contact 2026 © - all rights reserved
https://www.phoenixcontact.com

Phoenix Contact USA
586 Fulling Mill Road
Middletown, PA 17057, United States
(+717) 944-1300
info@phoenixcon.com