ES-FT-HSC20 - Connector

1524986

https://www.phoenixcontact.com/us/products/1524986

Please be informed that the data shown in this PDF document is generated from our online catalog. Please find the complete data in the user documentation. Our general terms of use for downloads are valid.



Stacked connector, female connector housing, protection class IP20

Commercial data

Item number	1524986
Packing unit	20 pc
Minimum order quantity	20 pc
Sales key	AB04
Product key	ABLDBA
GTIN	4063151992545
Weight per piece (including packing)	54.8 g
Weight per piece (excluding packing)	47.937 g
Customs tariff number	85366990
Country of origin	CN

Technical data

Product properties

Product type	Connectors for energy storage
Product family	HSC

Insulation characteristics

Degree of pollution	2

Electrical properties

Rated current	100 A

Material specifications

Color	black
Color of the housing part	black
Material Housing	EP (Housing)
Flammability rating according to UL 94	V0
Insulating material group	I
Contact surface	Cu
Contact surface material	Ag/Sn (tarnish protection)

Mechanical properties

Mechanical data

Insertion/withdrawal cycles	100

Environmental and real-life conditions

Ambient conditions

Ambient temperature (storage/transport)	-40 °C ... 125 °C
Altitude	≤ 4000 m

Standards and regulations

Standards/specifications	TÜV (PPP 51090B)
	UL 4128

Drawings

Drilling plan/solder pad geometry

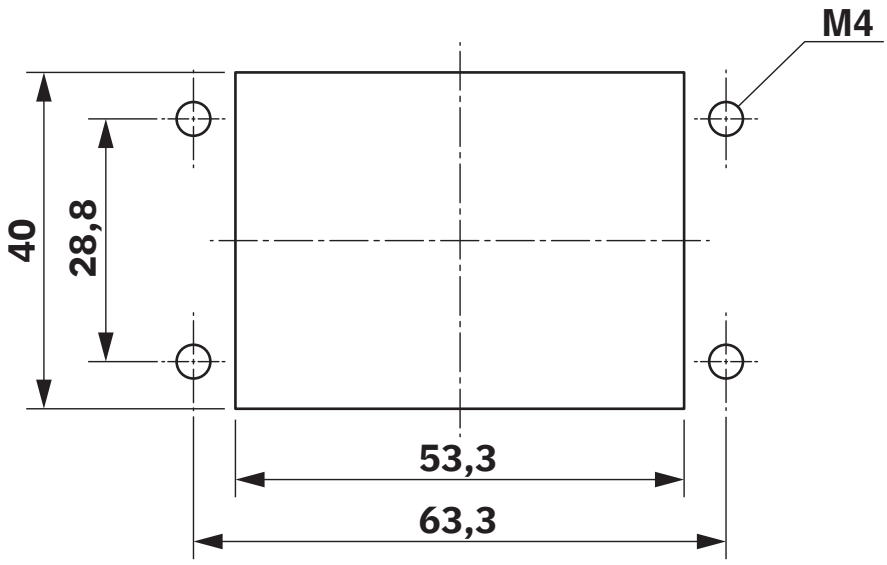

Classifications

ECLASS

ECLASS-13.0	27440292
ECLASS-15.0	27440292

ETIM

ETIM 10.0	EC002943

Environmental product compliance

EU RoHS

Fulfills EU RoHS substance requirements	Yes, No exemptions

China RoHS

Environment friendly use period (EFUP)	EFUP-E
	No hazardous substances above the limits

EU REACH SVHC

REACH candidate substance (CAS No.)	No substance above 0.1 wt%

Phoenix Contact 2026 © - all rights reserved
https://www.phoenixcontact.com

Phoenix Contact USA
586 Fulling Mill Road
Middletown, PA 17057, United States
(+717) 944-1300
info@phoenixcon.com