SACC-FS-4QO-0,75-M SCO - Connector

1521601

https://www.phoenixcontact.com/us/products/1521601

Please be informed that the data shown in this PDF document is generated from our online catalog. Please find the complete data in the user documentation. Our general terms of use for downloads are valid.



Connector, Universal, 4-position, Socket straight M12 SPEEDCON, coding: A, Insulation displacement connection, knurl material: Zinc die-cast, nickel-plated, external cable diameter 4 mm ... 8 mm

Your advantages

- Safe use in the field, thanks to a high degree of protection
- Save time, thanks to installation with SPEEDCON fast locking system
- Insulation displacement connection: innovative and time-saving assembly without stripping the single wire

Commercial data

Item number	1521601
Packing unit	1 pc
Minimum order quantity	1 pc
Sales key	BF31
Product key	AF2CCA
GTIN	4017918953041
Weight per piece (including packing)	16.2 g
Weight per piece (excluding packing)	13.56 g
Customs tariff number	85366990
Country of origin	DE

Technical data

Notes

Assembly note	NOTE: Observe the permissible bending radii when routing cables, since the degree of protection may be at risk if the bending forces are too high. Reduce mechanical loads upstream of the connector, e.g., by using cable ties.

Mounting

Assembly note	AWG 18 wire cross section upon request

Product properties

Product type	Circular connector (cable-side)
Number of positions	4
No. of cable outlets	1
Shielded	no
Coding	A
Cable outlet	straight

Insulation characteristics

Overvoltage category	III
Degree of pollution	3

Dimensions

Dimensional drawing	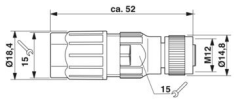
Length	52 mm
Wrench size, union nut	15 mm
Wrench size, counter nut	15 mm

External dimensions

Outside diameter	4 mm ... 8 mm

Housing

Diameter housing	18.4 mm

Material specifications

Flammability rating according to UL 94	V0
Seal material	NBR
Material of grip body	PA 6
Contact material	CuSn
Contact surface material	Ni/Au

Contact carrier material	TPU
Material for screw connection	Zinc die-cast, nickel-plated
Wire insulation material	PVC / PE / PP / rubber

Connection data

Conductor connection

Connection method	Insulation displacement connection
Connection cross section	0.34 mm² ... 0.75 mm²
Connection cross section AWG	22 ... 18
Tightening torque	0.4 Nm (M12 knurl)
	1.5 Nm (Pressure nut)

Connection assignment

Contact | Color (signal designation) | Contact (optional)	1 = BN
	2 = WH
	3 = BU
	4 = BK

Electrical properties

Rated surge voltage	4 kV
Insulation resistance	≥ 100 MΩ
Nominal voltage U_N	250 V AC
	250 V DC
Nominal current I_N	4 A

Mechanical properties

Mechanical data

Insertion/withdrawal cycles	≥ 100

Connector

Connection 1

Head design	Socket
Head cable outlet	straight
Head thread type	M12
Head locking type	SPEEDCON
Coding	A

Interfaces

Signal type/category	Universal

Cable/line

External cable diameter	4 mm ... 8 mm

Environmental and real-life conditions

Ambient conditions

Degree of protection	IP65
	IP67
Ambient temperature (operation) (male connector/female connector)	-25 °C ... 80 °C (Plug / socket)
Ambient temperature (assembly)	-5 °C ... 50 °C (During assembly)

Standards and regulations

Standard designation	M12 connector
Standards/specifications	according to IEC 61076-2-101

Drawings

Dimensional drawing

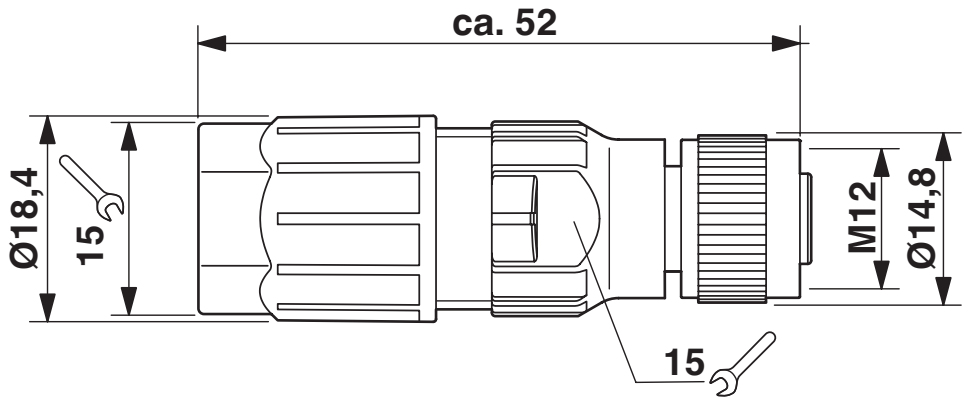

M12 x 1 socket, straight

Functional drawing

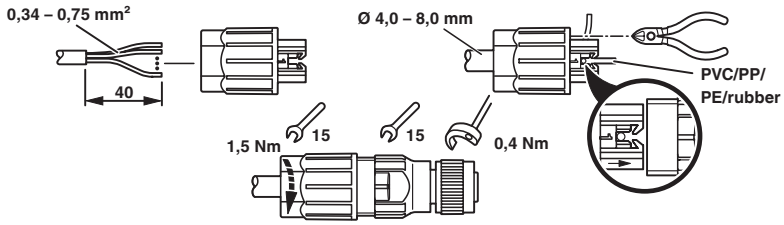

Schematic diagram

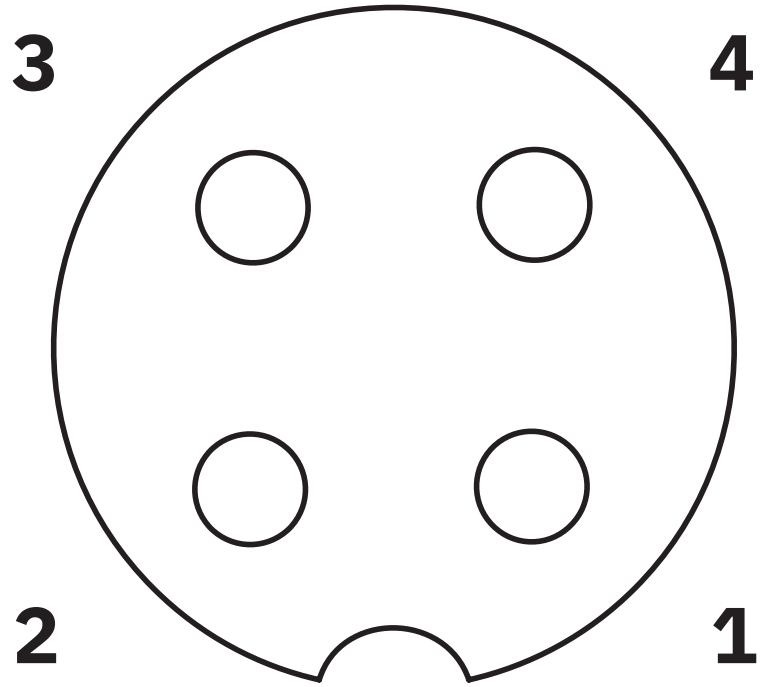

Pin assignment M12 socket, 4-pos., A-coded, view female side

Approvals

To download certificates, visit the product detail page: https://www.phoenixcontact.com/us/products/1521601

cUL Recognized
Approval ID: E118976

	Nominal voltage U_N	Nominal current I_N	Cross section AWG	Cross section mm^2
keine				
	300 V	4 A	-	-

UL Recognized
Approval ID: E118976

	Nominal voltage U_N	Nominal current I_N	Cross section AWG	Cross section mm^2
keine				
	300 V	4 A	-	-

Classifications

ECLASS

ECLASS-13.0	27440116
ECLASS-15.0	27440116

ETIM

ETIM 10.0	EC002635

UNSPSC

UNSPSC 21.0	39121400

Environmental product compliance

EU RoHS

Fulfills EU RoHS substance requirements	Yes, No exemptions

China RoHS

Environment friendly use period (EFUP)	EFUP-E
	No hazardous substances above the limits

EU REACH SVHC

REACH candidate substance (CAS No.)	No substance above 0.1 wt%

Phoenix Contact 2026 © - all rights reserved
https://www.phoenixcontact.com

Phoenix Contact USA
586 Fulling Mill Road
Middletown, PA 17057, United States
(+717) 944-1300
info@phoenixcon.com