SACC-M12MSD-4CON-PG 7-SH - Data connector

1521258

https://www.phoenixcontact.com/us/products/1521258

Please be informed that the data shown in this PDF document is generated from our online catalog. Please find the complete data in the user documentation. Our general terms of use for downloads are valid.



Data connector, Ethernet CAT5 (100 Mbps), 4-position, shielded, Plug straight M12, coding: D, Screw connection, knurl material: Brass, nickel-plated, cable gland Pg7, external cable diameter 4 mm ... 6 mm

Your advantages

- Safe use in the field, thanks to a high degree of protection
- Screw connection: proven connection technology for a large selection of different conductors
- Reliable signal transmission – 360° shielding in environments with electromagnetic interference

Commercial data

Item number	1521258
Packing unit	1 pc
Minimum order quantity	1 pc
Sales key	BF30
Product key	AF2CBI
GTIN	4017918968601
Weight per piece (including packing)	56 g
Weight per piece (excluding packing)	55.7 g
Customs tariff number	85366990
Country of origin	CN

Technical data

Notes

General	This product corresponds to the PROFINET Cabling and Interconnection Technology Guideline for PROFINET regulations, version 2.00, order no: 2.252, Chapter 8.2 Connectors for Outside Environment (Balanced cabling)
Assembly note	NOTE: Observe the permissible bending radii when routing cables, since the degree of protection may be at risk if the bending forces are too high. Reduce mechanical loads upstream of the connector, e.g., by using cable ties.

Product properties

Product type	Circular connector (cable-side)
Application	Data
Number of positions	4
No. of cable outlets	1
Shielded	yes
Coding	D
Pg screw connection	Pg7

Insulation characteristics

Overvoltage category	II
Degree of pollution	3

Dimensions

Dimensional drawing	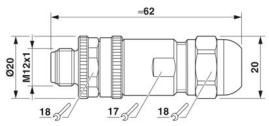
Width	20 mm
Height	20 mm
Length	62 mm

External dimensions

Outside diameter	4 mm ... 6 mm

Housing

Diameter housing	20 mm

Material specifications

Flammability rating according to UL 94	HB
Seal material	NBR
Material of grip body	Brass, nickel-plated
Contact material	CuZn
Contact surface material	Au

Contact carrier material	PA
Material for screw connection	Brass, nickel-plated

Connection data

Conductor connection

Connection method	Screw connection
Connection cross section	0.25 mm² ... 0.75 mm² (without ferrule)
	0.14 mm² ... 0.5 mm² (with ferrule)
	0.25 mm² ... 0.75 mm² (solid)
Connection cross section AWG	24 ... 18 (without ferrule)
	26 ... 20 (with ferrule)
Stripping length of the individual wire	5 mm
Tightening torque	0.4 Nm (M12 knurl)
	0.2 Nm (Screw terminal blocks)
	0.8 Nm ... 1 Nm (Pressure nut with coupling sleeve)

Electrical properties

Rated surge voltage	2.5 kV
Insulation resistance	≥ 100 MΩ
Nominal voltage U_N	48 V AC
	60 V DC
Nominal current I_N	4 A
Transmission speed	100 Mbps

Mechanical properties

Mechanical data

Insertion/withdrawal cycles	≥ 100

Connector

Connection 1

Head design	Plug
Head cable outlet	straight
Head thread type	M12
Coding	D

Interfaces

Signal type/category	Ethernet CAT5 (based on IEC 11801), 100 Mbps

Environmental and real-life conditions

Ambient conditions

Degree of protection	IP67
Ambient temperature (operation) (male connector/female connector)	-40 °C ... 85 °C (Plug / socket)

Standards and regulations

Standard designation	M12 connector
Standards/specifications	IEC 61076-2-101

Drawings

Dimensional drawing

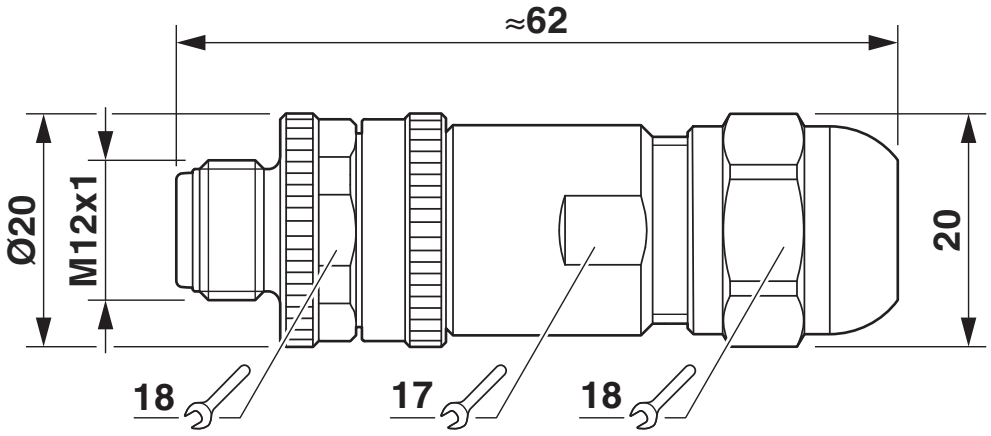

Plug, M12 x 1, straight, shielded

Schematic diagram

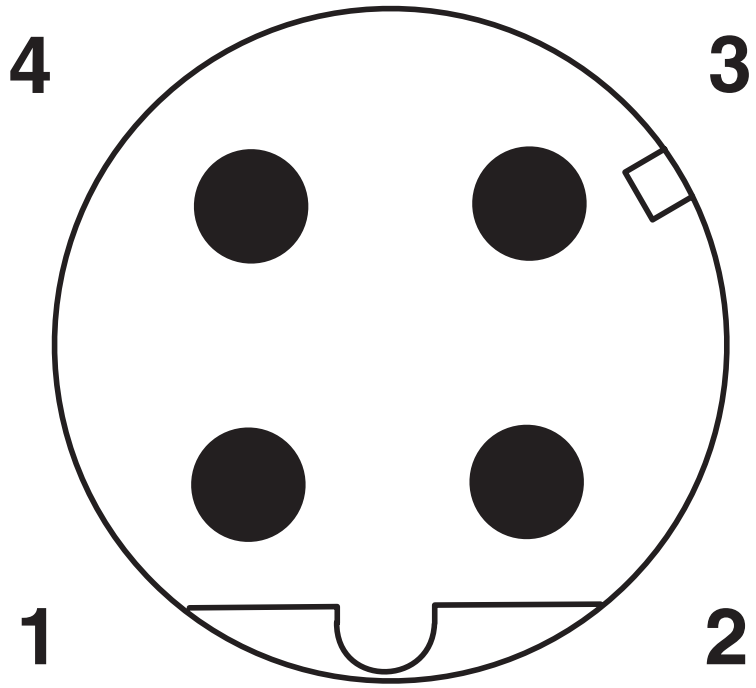

Pin assignment M12 male connector, 4-pos., D-coded, male side

Approvals

To download certificates, visit the product detail page: https://www.phoenixcontact.com/us/products/1521258

cUL Recognized
Approval ID: FILE E 221474

	Nominal voltage U_N	Nominal current I_N	Cross section AWG	Cross section mm^2
keine				
	250 V	4 A	-	-

UL Recognized
Approval ID: FILE E 221474

	Nominal voltage U_N	Nominal current I_N	Cross section AWG	Cross section mm^2
keine				
	250 V	4 A	-	-

Classifications

ECLASS

ECLASS-13.0	27440116
ECLASS-15.0	27440116

ETIM

ETIM 10.0	EC002635

UNSPSC

UNSPSC 21.0	39121400

Environmental product compliance

EU RoHS

Fulfills EU RoHS substance requirements	Yes
Exemption	6(c)

China RoHS

Environment friendly use period (EFUP)	EFUP-50
	An article-related China RoHS declaration table can be found in the download area for the respective article under "Manufacturer declaration". For all articles with EFUP-E, no China RoHS declaration table issued and required.

EU REACH SVHC

REACH candidate substance (CAS No.)	Lead(CAS: 7439-92-1)
SCIP	7afe2060-a5ae-4f93-8eb0-c27d5827082b

EF3.1 Climate Change

CO2e kg	0.808 kg CO2e

Phoenix Contact 2026 © - all rights reserved
https://www.phoenixcontact.com

Phoenix Contact USA
586 Fulling Mill Road
Middletown, PA 17057, United States
(+717) 944-1300
info@phoenixcon.com