SAC-3P-M12MS-M 8SIFS - Adapter

1519781

https://www.phoenixcontact.com/us/products/1519781

Please be informed that the data shown in this PDF document is generated from our online catalog. Please find the complete data in the user documentation. Our general terms of use for downloads are valid.



Adapter, 3-position, Plug straight M12, coding: A, on Socket straight M8 Snap-in, coding: A

Commercial data

Item number	1519781
Packing unit	5 pc
Minimum order quantity	1 pc
Sales key	BF10
Product key	AF1GBA
GTIN	4046356019972
Weight per piece (including packing)	12.23 g
Weight per piece (excluding packing)	8.43 g
Customs tariff number	85366990
Country of origin	DE

Technical data

Product properties

Product type	M8/M12 adapters
Number of positions	3
No. of cable outlets	1
Coding	A

Insulation characteristics

Overvoltage category	II
Degree of pollution	3

Electrical properties

Insulation resistance	≥ 100 MΩ
Nominal voltage U_N	48 V AC
	60 V DC
Nominal current I_N	4 A

Signaling

Status display	no
Status display present	no

Dimensions

Dimensional drawing	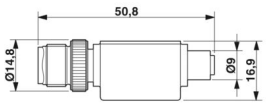
Width	17 mm
Height	14.8 mm
Length	50.8 mm

Material specifications

Flammability rating according to UL 94	HB
Seal material	NBR
Material of grip body	TPU, hardly inflammable, self-extinguishing
Contact material	CuSn
Contact surface material	Ni/Au
Contact carrier material	TPU GF
Material for screw connection	Zinc die-cast, nickel-plated

Connector

Connection 1

Type	Plug straight M12
Number of positions	3
Coding type	A

Connection 2

Type	Socket straight M8 Snap-in
Number of positions	3
Locking type	Snap-in
Coding type	A

Mechanical properties

Mechanical data

Insertion/withdrawal cycles	≥ 100

Environmental and real-life conditions

Ambient conditions

Degree of protection	IP65
	IP67
Ambient temperature (operation) (male connector/female connector)	-25 °C ... 90 °C

Standards and regulations

Standard designation	M12 connector
Standards/specifications	IEC 61076-2-101
Standard designation	M8 connector
Standards/specifications	IEC 61076-2-104

Drawings

Dimensional drawing

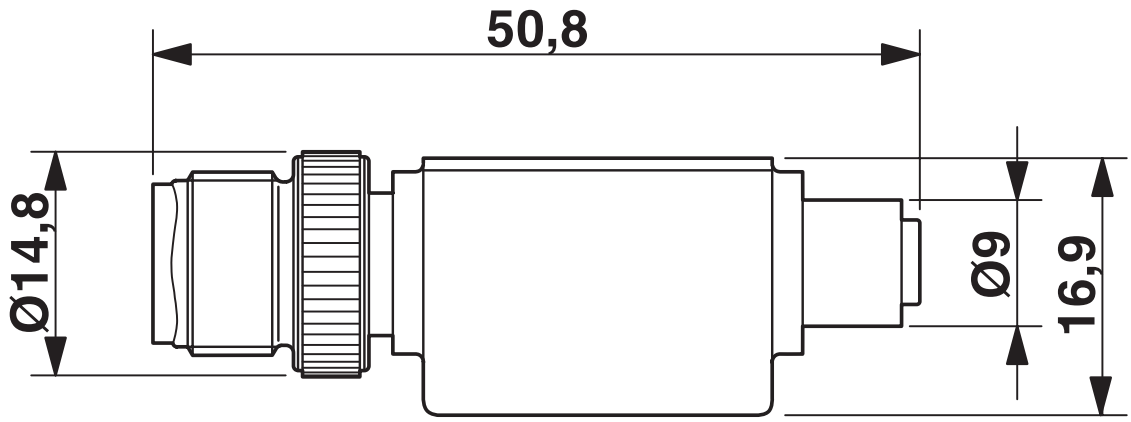

M8/M12 adapter

Schematic diagram

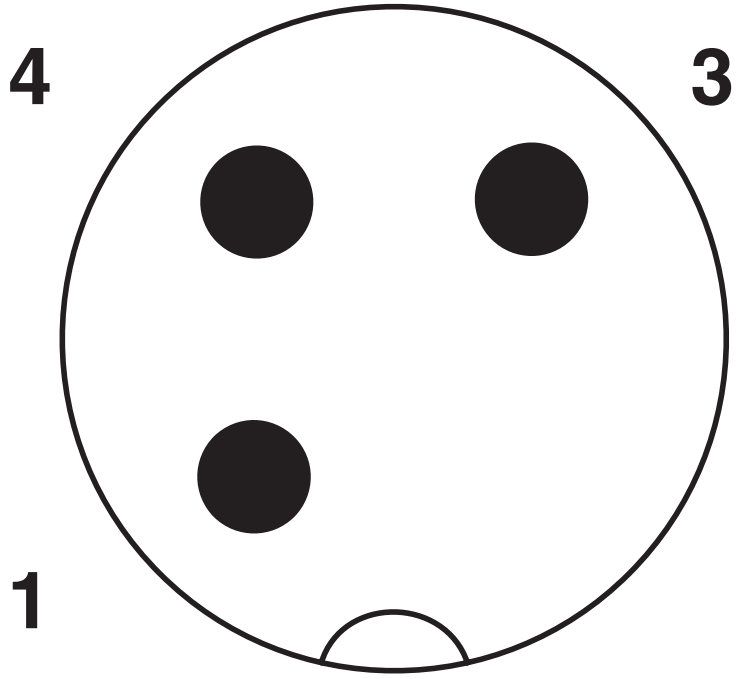

Pin assignment M12 plug, 3-pos., A-coded, view male side

Schematic diagram

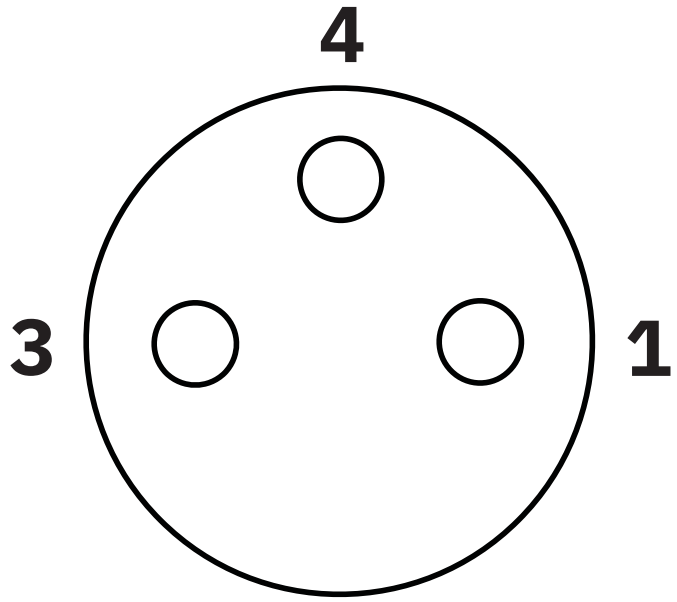

Pin assignment M8 socket, 3-pos., view female side

Circuit diagram

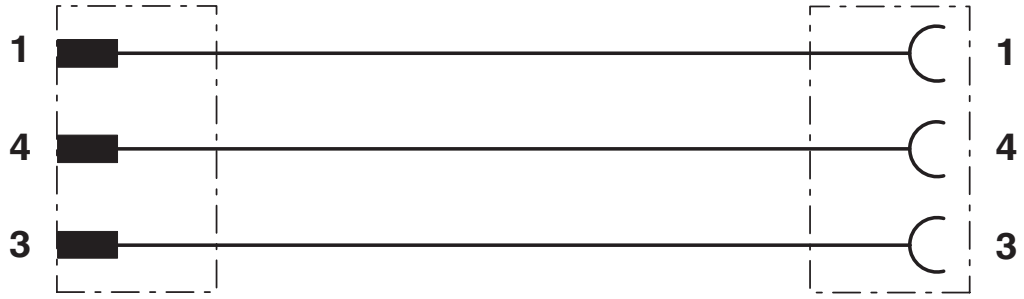

Contact assignment of M8 plugs / M12 sockets

Approvals

To download certificates, visit the product detail page: https://www.phoenixcontact.com/us/products/1519781

EAC
Approval ID: RU C-DE.AI30.B.01102

UL Listed
Approval ID: E221474

	Nominal voltage U_N	Nominal current I_N	Cross section AWG	Cross section mm^2
keine				
	30 V	4 A	-	-

cUL Listed
Approval ID: E221474

	Nominal voltage U_N	Nominal current I_N	Cross section AWG	Cross section mm^2
keine				
	30 V	4 A	-	-

Classifications

ECLASS

ECLASS-13.0	27440106
ECLASS-15.0	27440106

ETIM

ETIM 10.0	EC002925

UNSPSC

UNSPSC 21.0	31251500

Environmental product compliance

EU RoHS

Fulfills EU RoHS substance requirements	Yes, No exemptions

China RoHS

Environment friendly use period (EFUP)	EFUP-E
	No hazardous substances above the limits

EU REACH SVHC

REACH candidate substance (CAS No.)	No substance above 0.1 wt%

EF3.1 Climate Change

CO2e kg	0.059 kg CO2e

Phoenix Contact 2026 © - all rights reserved
https://www.phoenixcontact.com

Phoenix Contact USA
586 Fulling Mill Road
Middletown, PA 17057, United States
(+717) 944-1300
info@phoenixcon.com