SACC-M 8FS-4PCON - Connector

1506781

https://www.phoenixcontact.com/us/products/1506781

Please be informed that the data shown in this PDF document is generated from our online catalog. Please find the complete data in the user documentation. Our general terms of use for downloads are valid.



Connector, Universal, 4-position, Socket straight M8, coding: A, Piercecon® fast connection, knurl material: Brass, nickel-plated, external cable diameter 3 mm ... 5 mm

Your advantages

- Safe use in the field, thanks to a high degree of protection
- Piercecon® connection: maximum contact density in a connector that can be assembled

Commercial data

Item number	1506781
Packing unit	1 pc
Minimum order quantity	1 pc
Sales key	BF32
Product key	AF2BGA
GTIN	4017918892708
Weight per piece (including packing)	19 g
Weight per piece (excluding packing)	19.4 g
Customs tariff number	85366990
Country of origin	DE

Technical data

Notes

Assembly note	NOTE: Observe the permissible bending radii when routing cables, since the degree of protection may be at risk if the bending forces are too high. Reduce mechanical loads upstream of the connector, e.g., by using cable ties.

Product properties

Product type	Circular connector (cable-side)
Number of positions	4
No. of cable outlets	1
Shielded	no
Coding	A
Cable outlet	straight

Insulation characteristics

Overvoltage category	II
Degree of pollution	3

Dimensions

Dimensional drawing	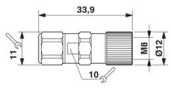
Length	33.9 mm
Wrench size, union nut	11 mm

External dimensions

Outside diameter	3 mm ... 5 mm

Housing

Diameter housing	12 mm

Material specifications

Flammability rating according to UL 94	V0
Seal material	NBR
Material of grip body	PA 6.6
Contact material	CuZn
Contact surface material	Ni/Au
Contact carrier material	PA 6.6
Material for screw connection	Brass, nickel-plated

Connection data

Conductor connection

Connection method	Piercecon® fast connection
Connection cross section	0.14 mm² ... 0.38 mm² (flexible)
Connection cross section AWG	22 ... 26 (flexible)
Tightening torque	0.5 Nm (Pressure nut with coupling sleeve)
	0.8 Nm (Connector with coupling sleeve)
	0.2 Nm (M8 knurl)

Connection assignment

Contact | Color (signal designation) | Contact (optional)	1 = BN
	2 = WH
	3 = BU
	4 = BK

Electrical properties

Insulation resistance	≥ 100 MΩ
Nominal voltage U_N	30 V AC
	30 V DC
Nominal current I_N	4 A

Mechanical properties

Mechanical data

Insertion/withdrawal cycles	≥ 100

Connector

Connection 1

Head design	Socket
Head cable outlet	straight
Head thread type	M8
Coding	A

Interfaces

Signal type/category	Universal

Environmental and real-life conditions

Ambient conditions

Degree of protection	IP68
Ambient temperature (operation) (male connector/female connector)	-25 °C ... 85 °C (Plug / socket)

Standards and regulations

M8

Standard designation	M8 connector

Standards/specifications	IEC 61076-2-104

Drawings

Dimensional drawing

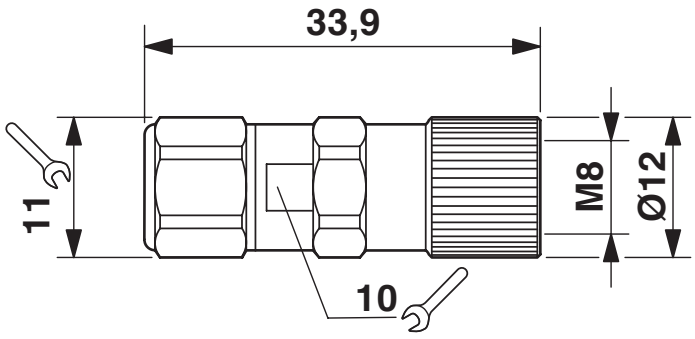

Socket M8 x 1, straight

Functional drawing

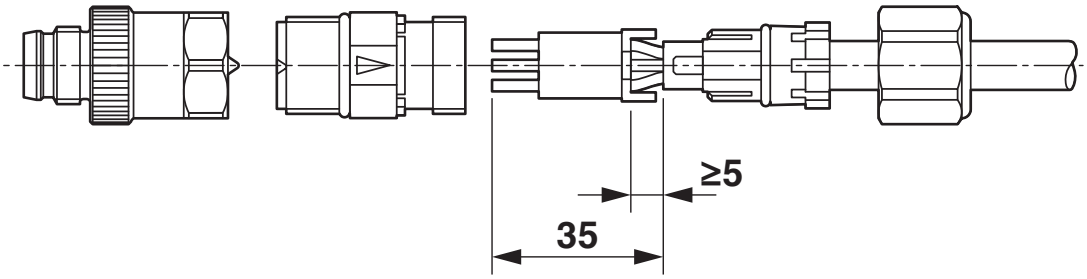

a = cut flush
b = coding
When assembled, the coding marks must line up.

Schematic diagram

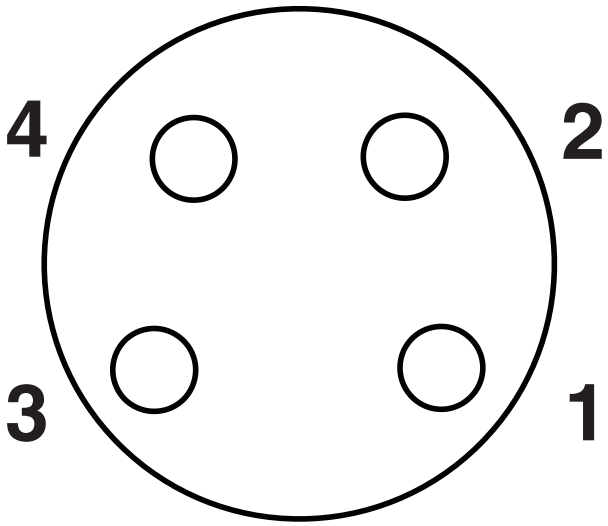

Pin assignment M8 socket, 4-pos., view female side

Classifications

ECLASS

ECLASS-13.0	27440116
ECLASS-15.0	27440116

ETIM

ETIM 10.0	EC002635

UNSPSC

UNSPSC 21.0	39121400

Environmental product compliance

EU RoHS

Fulfills EU RoHS substance requirements	Yes, No exemptions

China RoHS

Environment friendly use period (EFUP)	EFUP-E
	No hazardous substances above the limits

EU REACH SVHC

REACH candidate substance (CAS No.)	No substance above 0.1 wt%

Phoenix Contact 2026 © - all rights reserved
https://www.phoenixcontact.com

Phoenix Contact USA
586 Fulling Mill Road
Middletown, PA 17057, United States
(+717) 944-1300
info@phoenixcon.com