SACB-6/ 6-L-M23 P12 - Distributor box

1491728

https://www.phoenixcontact.com/us/products/1491728

Please be informed that the data shown in this PDF document is generated from our online catalog. Please find the complete data in the user documentation. Our general terms of use for downloads are valid.



Marking labels are not included in the scope of delivery

Distributor box, application: Standard, connection method: M12 PUSH-PULL female connector / M12 socket, number of slots: 6, number of positions: 4, coding: A, slot assignment: single, status display: yes, PNP; master cable connection: M23 plug-in connection (for standard and ONECLICK fast-locking system) 90°, shielding: no

Your advantages

- Safety in the field, thanks to molded housing and high degree of protection
- Fast, secure installation of connectors with the push-pull fast-locking system in accordance with IEC 61076-2-010

Commercial data

Item number	1491728
Packing unit	1 pc
Minimum order quantity	1 pc
Sales key	BF41
Product key	AF3CBB
GTIN	4063151939953
Weight per piece (including packing)	232 g
Weight per piece (excluding packing)	225 g
Customs tariff number	85366990
Country of origin	DE

Technical data

Notes

Notes on connection	Compatibility advantage: Thanks to the technical implementation of the push-pull dual-contour design, the distributor box can be connected using standard screw-type connectors (M12) and push-pull connectors.
Assembly note	NOTE: Observe the permissible bending radii when routing cables, since the degree of protection may be at risk if the bending forces are too high. Reduce mechanical loads upstream of the connector, e.g., by using cable ties.
Note on application	Unused slots are to be sealed off prior to commissioning. Suitable sealing elements are to be found under "Accessories".

Product properties

Product type	Distributor box
Application	Standard
Number of positions	4
Number of slots	6
Coding	A

Electrical properties

Max. operating voltage U_{max}	30 V DC
Nominal voltage U_N	24 V DC
Rated current, total	12 A
Max. current carrying capacity per path	2 A
Current carrying capacity per slot	4 A

Connection data

Conductor connection

Sensor/actuator connection system	M12 PUSH-PULL female connector
	M12 socket
Tightening torque slot sensor/actuator cable	0.4 Nm

Connection assignment

Slot/position = Wire color or connection	1 / 4 (A) = 1
	2 / 4 (A) = 2
	3 / 4 (A) = 3
	4 / 4 (A) = 4
	5 / 4 (A) = 5
	6 / 4 (A) = 6
	1-6 / 1 (+ 24 V) = 11
	1-6 / 3 (0 V) = 9+10
	1-6 / 5 (PE) = 12

Signaling

Status display present	yes

Dimensions

Dimensional drawing	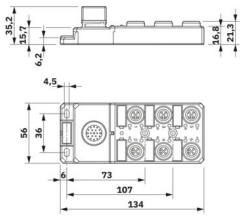
Width	56 mm
Height	35.2 mm
Length	134 mm

Material specifications

Material Housing	PBT
Flammability rating according to UL 94	V0
Seal material	FKM
Contact material	CuSn
Contact surface material	Ni/Au
Contact carrier material	PA
Material of contact, master cable side	CU alloy
Material of contact surface, master cable side	gold-plated

Cable/line

Connection method	M23 plug-in connection (for standard and ONECLICK fast-locking system)

Environmental and real-life conditions

Ambient conditions

Degree of protection	IP65
	IP67
Ambient temperature (operation)	-25 °C ... 80 °C

Drawings

Dimensional drawing

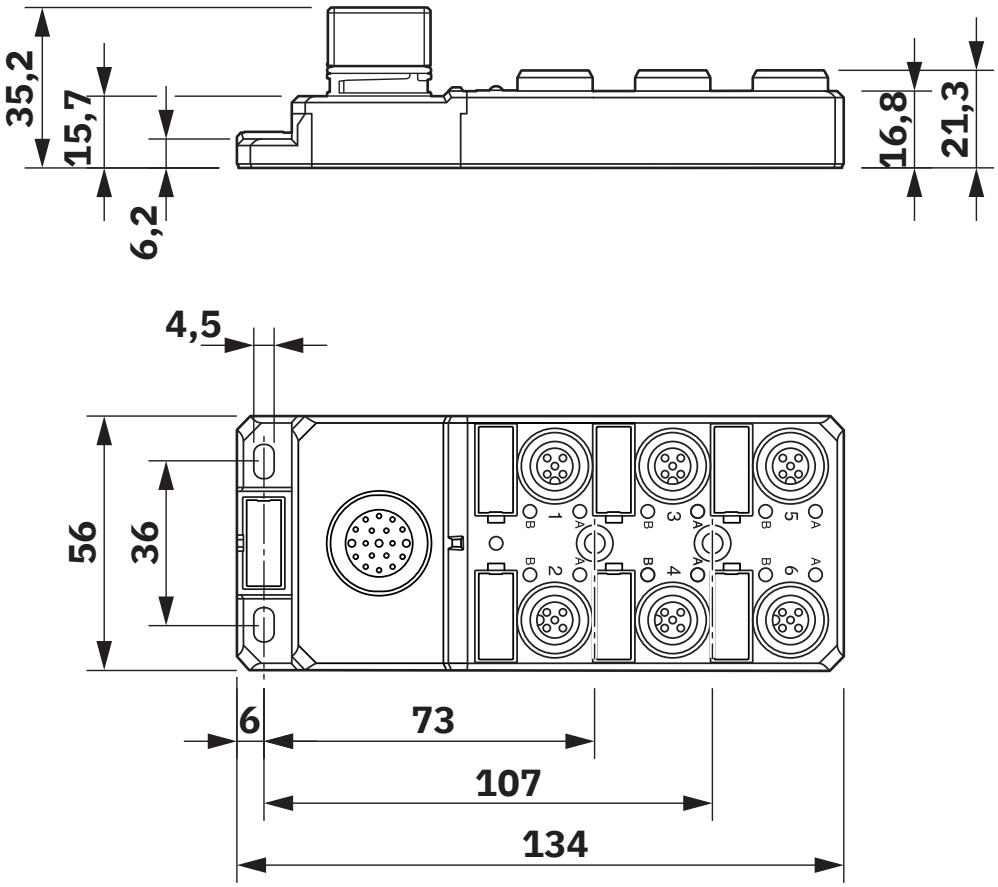

Schematic diagram

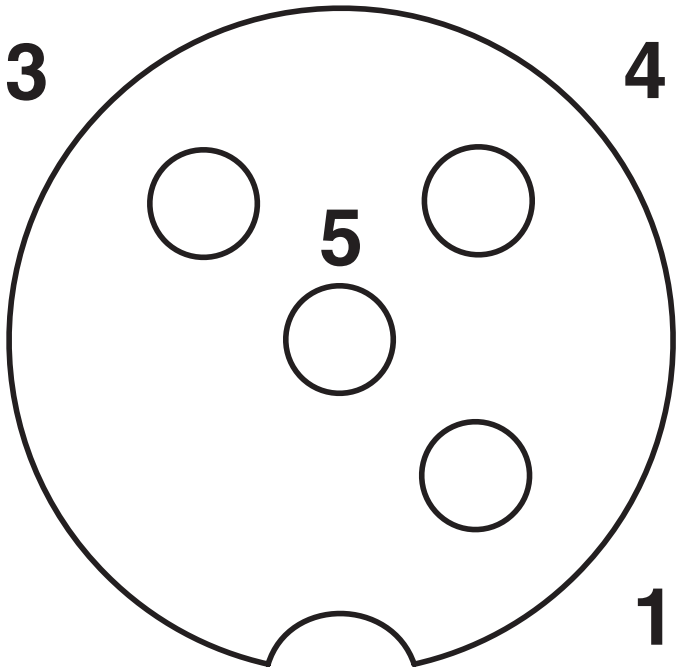

M12 slot, socket, 4-pos.

Schematic diagram

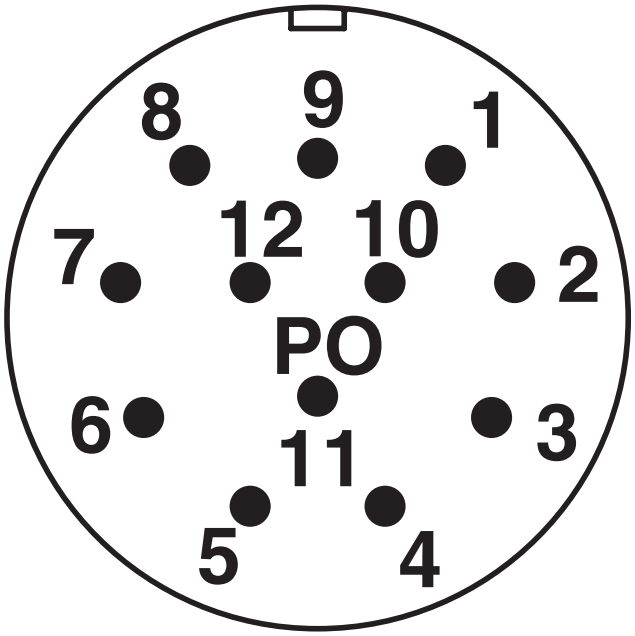

M23 plug connection pin, 12-pos.

Circuit diagram

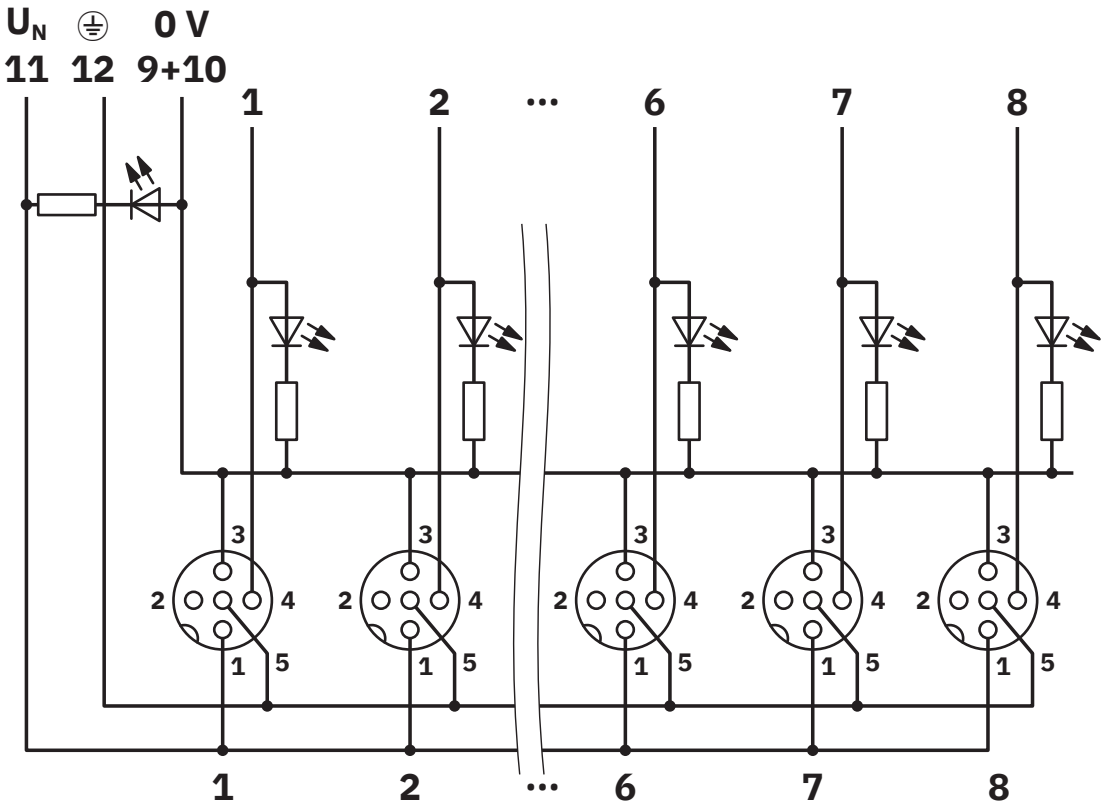

Approvals

To download certificates, visit the product detail page: https://www.phoenixcontact.com/us/products/1491728

cULus Listed
Approval ID: E221474

	Nominal voltage U_N	Nominal current I_N	Cross section AWG	Cross section mm^2
keine				
	24 V	12 A	-	-

Classifications

ECLASS

ECLASS-13.0	27440111
ECLASS-15.0	27440111

ETIM

ETIM 10.0	EC003558

UNSPSC

UNSPSC 21.0	31251500

Environmental product compliance

EU RoHS

Fulfills EU RoHS substance requirements	Yes, No exemptions

China RoHS

Environment friendly use period (EFUP)	EFUP-E
	No hazardous substances above the limits

EU REACH SVHC

REACH candidate substance (CAS No.)	Bumetrizole (UV-326)(CAS: 3896-11-5)
	Triphenyl phosphate(CAS: 115-86-6)

Phoenix Contact 2026 © - all rights reserved
https://www.phoenixcontact.com

Phoenix Contact USA
586 Fulling Mill Road
Middletown, PA 17057, United States
(+717) 944-1300
info@phoenixcon.com