NBC-P12MSD/ 1,0-93E/R4AC - Network cable

1476023

https://www.phoenixcontact.com/us/products/1476023

Please be informed that the data shown in this PDF document is generated from our online catalog. Please find the complete data in the user documentation. Our general terms of use for downloads are valid.



Network cable, Ethernet CAT5 (100 Mbps), 4-position, PUR halogen-free, water blue RAL 5021, shielded (Advanced Shielding Technology), Plug straight M12 Push Pull, coding: D / IP67, on Plug straight RJ45 / IP20, cable length: 1 m

Commercial data

Item number	1476023
Packing unit	1 pc
Minimum order quantity	1 pc
Sales key	BF04
Product key	AF1CJJ
GTIN	4063151889425
Weight per piece (including packing)	67.7 g
Weight per piece (excluding packing)	22.22 g
Customs tariff number	85444290
Country of origin	PL

Technical data

Product properties

Product type	Data cable preassembled
Application	Standard
Number of positions	4
Shielded	yes

Interfaces

Signal type/category	Ethernet CAT5 (IEC 11801), 100 Mbps

Electrical properties

Nominal voltage U_N	48 V AC
	60 V DC
Nominal current I_N	1 A
Transmission medium	Copper
Transmission speed	100 Mbps

Connector

Connection 1

Dimensional drawing	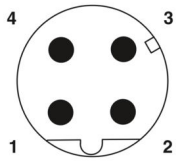 Pin assignment M12 male connector, 4-pos., D-coded, male side
Type	M12 Plug, straight, 4-position, shielded (Advanced Shielding Technology), Push Pull, Keying: D, Ethernet
Number of positions	4
Shielded	yes
Shielding	Advanced Shielding Technology
Signal type/category	Ethernet CAT5 (IEC 11801), 100 Mbps
Insertion/withdrawal cycles	≥ 100
Insulation resistance	≥ 100 MΩ
Overvoltage category	II
Degree of pollution	3
Material Contact	CuSn
Material Contact surface	Ni/Au
Material Contact carrier	PK
Material Grip body	TPU, hardly inflammable, self-extinguishing
Material Seal	FKM
Flammability rating according to UL 94	V0

Degree of protection	IP65
	IP67
Ambient temperature (operation)	-25 °C ... 85 °C
Standard designation	M12 connector
Standards/regulations	IEC 61076-2-010

Connection 2

Dimensional drawing	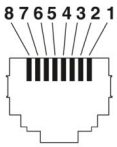 Connector pin assignment plug RJ45
Type	RJ45 Plug, straight, Ethernet
Signal type/category	Ethernet CAT5 (IEC 11801), 100 Mbps
Insertion/withdrawal cycles	≥ 750
Insulation resistance	≥ 100 MΩ
Overvoltage category	I
Degree of pollution	2
Material Contact	CuSn
Material Contact surface	Ni/Au
Material Contact carrier	PC
Material Housing	PA
Color (Housing)	gray
Flammability rating according to UL 94	V2
Degree of protection	IP20
Ambient temperature (operation)	-25 °C ... 60 °C

Cable/line

Cable length	1 m

Ethernet flexible CAT5, 2-pair [93E]

Dimensional drawing	
UL AWM Style	21238 (80 °C / 600 V)
Number of positions	4

Shielded	yes
Cable type	Ethernet flexible CAT5, 2-pair [93E]
Conductor structure	2x2xAWG26/7, SF/UTP
AWG signal line	26
Conductor cross-section	2x 2x 0.14 mm²
Wire diameter incl. insulation	0.95 mm ±0.05 mm
External cable diameter	6.40 mm ±0.2 mm
Outer sheath, material	PUR
External sheath, color	water blue RAL 5021
Conductor material	Bare Cu litz wires
Material wire insulation	Foamed PE
Single wire, color	white/orange-orange, white/green-green
Twisted pairs	2 cores to the pair
Overall twist	Two pairs with two fillers to the core
Optical shield covering	70 %
Insulation resistance	≥ 5 GΩ*km
Loop resistance	≤ 280.00 Ω/km
Wave impedance	100 Ω ±5 Ω (at 100 MHz)
Nominal voltage, cable	≤ 100 V
Test voltage Core/Core	2000 V (50 Hz, 1 min.)
Test voltage Core/Shield	2000.00 V (50 Hz, 1 min.)
Minimum bending radius, fixed installation	4 x D
Minimum bending radius, flexible installation	8 x D
Smallest bending radius, fixed installation	26 mm
Smallest bending radius, movable installation	51 mm
Halogen-free	according to IEC 60754-1
Flame resistance	according to IEC 60332-1-2
	in accordance with UN ECE-R 118.03
	UL 1581, Section 1060 and UL 2556, Section 9.3 (FT1)
	UL 1581, Section 1100 and UL 2556, Section 9.1 (HFT/FT2)
Resistance to oil	in accordance with IEC 60811-404
Ambient temperature (operation)	-40 °C ... 80 °C (cable, fixed installation)
	-30 °C ... 70 °C (Cable, flexible installation)

Drawings

Dimensional drawing

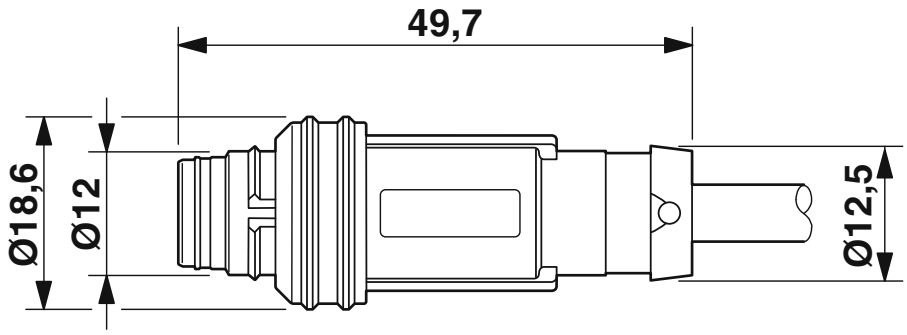

M12 push-pull male connector, straight

Dimensional drawing

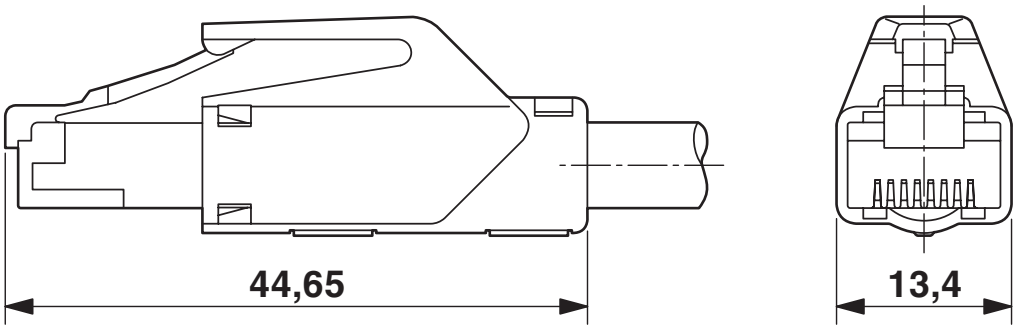

RJ45 connector, IP20

Schematic diagram

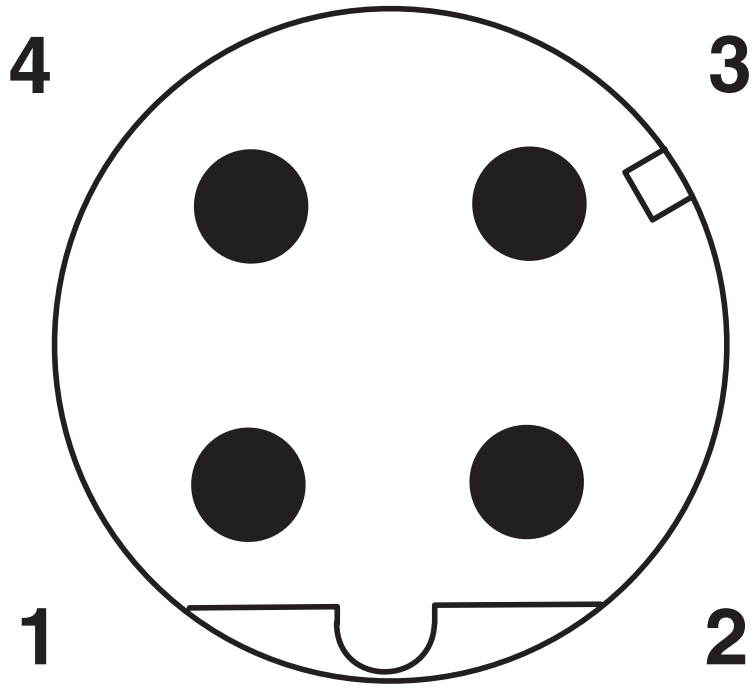

Pin assignment M12 male connector, 4-pos., D-coded, male side

Schematic diagram

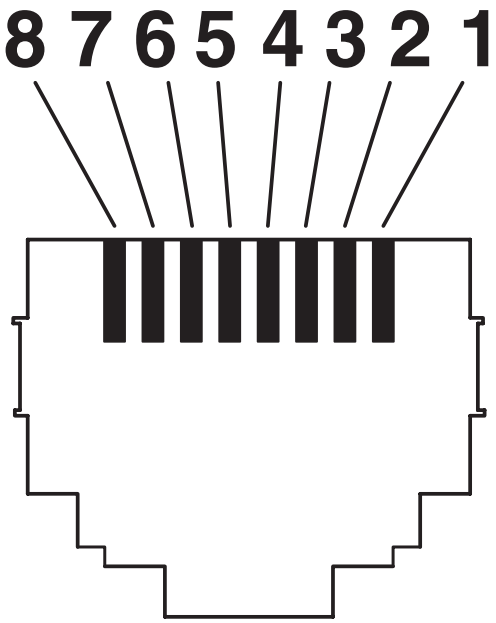

Connector pin assignment plug RJ45

Circuit diagram

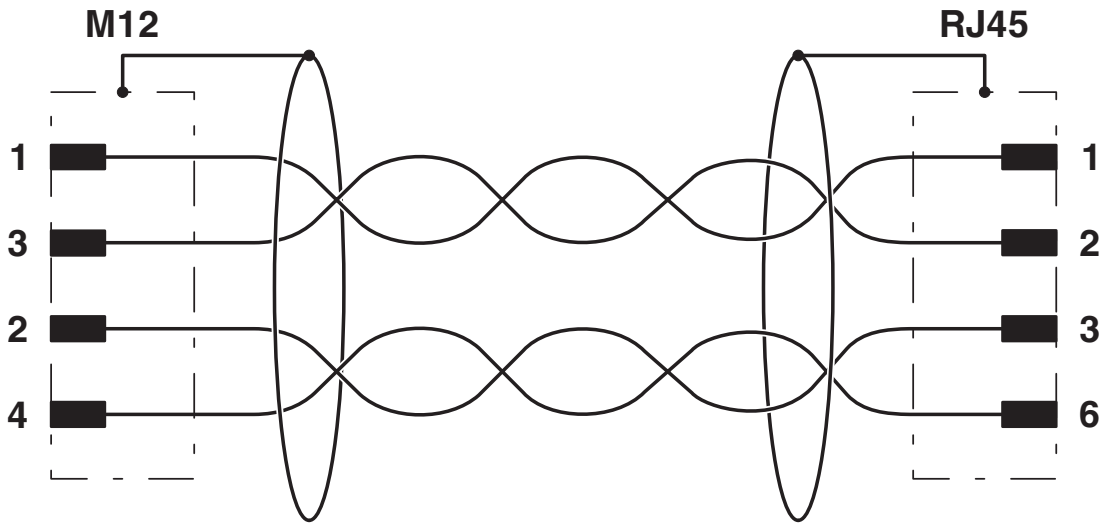

Contact assignment of the M12 and RJ45 plug

Approvals

To download certificates, visit the product detail page: https://www.phoenixcontact.com/us/products/1476023

cULus Listed
Approval ID: E335024

	Nominal voltage U_N	Nominal current I_N	Cross section AWG	Cross section mm^2
keine				
	30 V	0.5 A	-	-

Classifications

ECLASS

ECLASS-13.0	27060307
ECLASS-15.0	27060307

ETIM

ETIM 10.0	EC002599

UNSPSC

UNSPSC 21.0	26121600

Environmental product compliance

EU RoHS

Fulfills EU RoHS substance requirements	Yes, No exemptions

China RoHS

Environment friendly use period (EFUP)	EFUP-E
	No hazardous substances above the limits

EU REACH SVHC

REACH candidate substance (CAS No.)	No substance above 0.1 wt%

Phoenix Contact 2026 © - all rights reserved
https://www.phoenixcontact.com

Phoenix Contact USA
586 Fulling Mill Road
Middletown, PA 17057, United States
(+717) 944-1300
info@phoenixcon.com