PRC 5-FC-FS6 SET 25 - Coupler connector

1461454

https://www.phoenixcontact.com/us/products/1461454

Please be informed that the data shown in this PDF document is generated from our online catalog. Please find the complete data in the user documentation. Our general terms of use for downloads are valid.



Coupler connector, Range of articles: PRC 35, design: Release with tool or by hand (see accessories), color: black, number of positions: 5, min. conductor cross-section: 1.5 mm^2, max. conductor cross-section: 6 mm^2, rated voltage: 690 V AC, rated current: 35 A, Connection method: Screw connection, min. cable diameter: 8 mm, max. cable diameter: 21 mm, Variant for manual release

Your advantages

- Up to 75% smaller in size than industrial connectors with the same rating
- Locking mechanism can be unlocked manually or using a tool
- Suitable for applications in atmospheres containing salt and in direct sunlight
- Ideal for indoor and outdoor use due to weatherproof materials

Commercial data

Item number	1461454
Packing unit	25 pc
Minimum order quantity	100 pc
Product key	ABLCBA
GTIN	4063151853501
Weight per piece (including packing)	81.12 g
Weight per piece (excluding packing)	72.019 g
Country of origin	PL

Technical data

Notes

Order information:	Variant for manual release
Note on application	For assembly notes, please refer to the packing slip

Product properties

Product type	Installation connector
Product family	PRC 35
Type	Release with tool or by hand (see accessories)
Number of positions	5
Connection profile	4+PE

Insulation characteristics

Degree of pollution	2

Electrical properties

Rated voltage	690 V AC (III/2) in accordance with IEC 61984
	500 V AC (III/2) in accordance with IEC 61535/2 PfG 1915
	600 V AC / DC (III/2) in accordance with UL 2238 / UL 2237
	500 V DC (III/2) in accordance with IEC 61535
Rated current	35 A (With 6 mm² conductor cross-section in accordance with IEC 61984)
	32 A (With 6 mm² conductor cross-section in accordance with IEC 61984)
	21.4 A (With 6 mm² conductor cross-section and 85 °C in accordance with 2 PfG 1915)
	28 A (with AWG 10, in accordance with UL 2237)

Connection data

Connection technology

Connection method	Screw connection

Dimensions

Width	37.6 mm
Height	37.6 mm
Length	107.5 mm

Material specifications

Color (Housing)	black (RAL 9005)
Material Seal	EPDM (Housing seal)
Material Housing	PPE
Material Contact carrier	PPE
Material Cable gland	PPE
Material Contact	CuZn (Contact material, Pb < 0.1)

Flammability rating according to UL 94	V0

Cable/line

External cable diameter	8 mm ... 21 mm (For notes on cable clamping ranges, see packing slip)
Single wire, cross section	1.5 mm² 6 mm² 14 AWG 10 AWG
Halogen-free	yes (in accordance with IEC 61249-2-21:2003- 11 Cl.3.1)

Mechanical properties

Mechanical data

Insertion/withdrawal cycles	2000 (Test specification: IEC 60512-13-2)
Insertion force	50 N ±10 N (Test specification: IEC 60512-13-2)

Environmental and real-life conditions

Ambient conditions

Degree of protection (when plugged in)	IP66
	IP66
	IP66
Degree of protection	IP66
	IP68 (2 m / 24 h)
	IP69
	IP66/IP68 (2 m / 24 h) IP69K
Category of shock impact	IK08 (-25°C)
Ambient temperature (operation)	-40 °C ... 105 °C (observe derating)
Ambient temperature (storage/transport)	-40 °C ... 70 °C
Ambient temperature (assembly)	-5 °C ... 85 °C

Standards and regulations

Standards/specifications	IEC 61984:2008
	EN 61984:2008
	DIN EN IEC 61535:2020
	IEC 61535:2019
	2 PfG 1915/03.2015
	UL 2237 Ed.1:2021-01-08
	CSA C22.2 No. 182.3-16 Ed.2:2019-01

Drawings

Schematic diagram

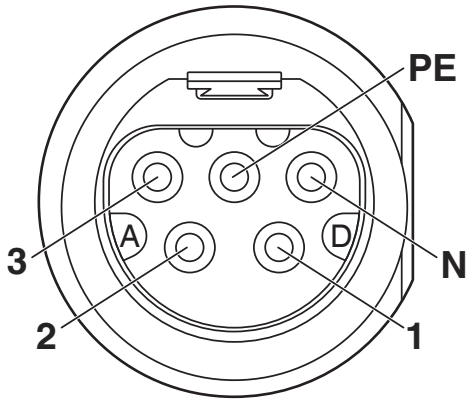

Connector pin assignment

Approvals

To download certificates, visit the product detail page: https://www.phoenixcontact.com/us/products/1461454

TÜV Rheinland
Approval ID: R 60168292 0001

	Nominal voltage U_N	Nominal current I_N	Cross section AWG	Cross section mm^2
keine				
	690 V	35 A	-	-

TÜV Rheinland
Approval ID: R 60117908

	Nominal voltage U_N	Nominal current I_N	Cross section AWG	Cross section mm^2
keine				
	500 V	21.4 A	-	-

TÜV Rheinland
Approval ID: R 60168255 0001

	Nominal voltage U_N	Nominal current I_N	Cross section AWG	Cross section mm^2
keine				
	500 V	32 A	-	-

DNV
Approval ID: TAE00002KM

Classifications

ECLASS

ECLASS-13.0	27440605
ECLASS-15.0	27440605

ETIM

ETIM 10.0	EC002560

Environmental product compliance

EU RoHS

Fulfills EU RoHS substance requirements	Yes, No exemptions

China RoHS

Environment friendly use period (EFUP)	EFUP-E
	No hazardous substances above the limits

EU REACH SVHC

REACH candidate substance (CAS No.)	Triphenyl phosphate(CAS: 115-86-6)
SCIP	76f94709-556b-41e1-8a07-fd1b5c1520d9

EF3.1 Climate Change

CO2e kg	0.818 kg CO2e

Phoenix Contact 2026 © - all rights reserved
https://www.phoenixcontact.com

Phoenix Contact USA
586 Fulling Mill Road
Middletown, PA 17057, United States
(+717) 944-1300
info@phoenixcon.com