HC-B 10-TFL-H-O1PG21S - Housing

1460049

https://www.phoenixcontact.com/us/products/1460049

Please be informed that the data shown in this PDF document is generated from our online catalog. Please find the complete data in the user documentation. Our general terms of use for downloads are valid.



HEAVYCON B10 sleeve housing, for single locking latch, height: 72 mm, with 1 x Pg21 gland, lateral cable outlet

Commercial data

Item number	1460049
Packing unit	1 pc
Note	Made to order (non-returnable)
Sales key	BF55
Product key	AF7AAC
GTIN	4046356695428
Weight per piece (including packing)	199.72 g
Weight per piece (excluding packing)	199.72 g
Customs tariff number	85389099
Country of origin	DE

Technical data

Notes

General	For contact inserts HC-B10, BB18, DD42, M, K8/24

Product properties

Product type	Housing with locking latch
Housing type	Sleeve housing
Application	Standard
Type	B10
No. of cable outlets	1
Type of the screw connection	1x Pg21
Shielded	no
Cable outlet	lateral
Pg screw connection	none

Dimensions

Dimensional drawing	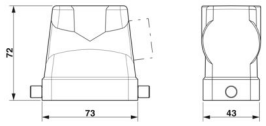
Width	43 mm
Height	72 mm
Length	73 mm

Material specifications

Housing material	Die-cast aluminum
Housing surface material	Powder-coated, gray

Mechanical properties

Mechanical data

Type of the screw connection	1x Pg21
Locking type	Pin

Mounting

Assembly note	For half and full screw connections

Environmental and real-life conditions

Ambient conditions

Degree of protection	IP65
Ambient temperature (operation)	-40 °C ... 125 °C

Drawings

Dimensional drawing

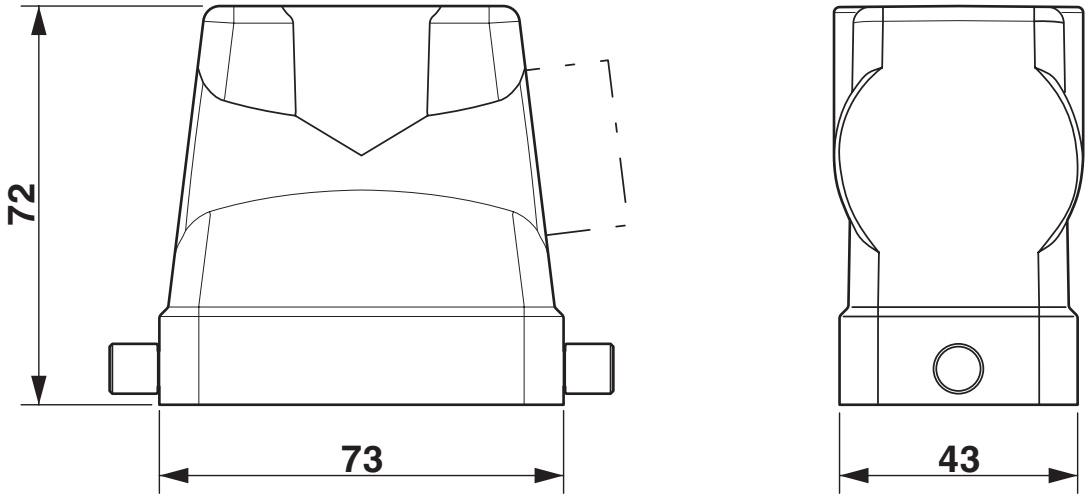

Dimensional drawing

Classifications

ECLASS

ECLASS-13.0	27440202
ECLASS-15.0	27440202

UNSPSC

UNSPSC 21.0	31261501

Environmental product compliance

China RoHS

Environment friendly use period (EFUP)	EFUP-E
	No hazardous substances above the limits

EU REACH SVHC

REACH candidate substance (CAS No.)	No substance above 0.1 wt%

Phoenix Contact 2026 © - all rights reserved
https://www.phoenixcontact.com

Phoenix Contact USA
586 Fulling Mill Road
Middletown, PA 17057, United States
(+717) 944-1300
info@phoenixcon.com