SAC-5P-MS/AD-2L SCO - Valve connector

1458596

https://www.phoenixcontact.com/us/products/1458596

Please be informed that the data shown in this PDF document is generated from our online catalog. Please find the complete data in the user documentation. Our general terms of use for downloads are valid.



Valve connector, 5-position, Plug straight M12 SPEEDCON, coding: A, with 2 LEDs, on Valve connector AD (pressure switch), with 2 LEDs

Commercial data

Item number	1458596
Packing unit	1 pc
Minimum order quantity	1 pc
Sales key	BF10
Product key	AF1GDA
GTIN	4046356639040
Weight per piece (including packing)	30 g
Weight per piece (excluding packing)	32.1 g
Customs tariff number	85366990
Country of origin	PL

Technical data

Product properties

Product type	Valve connector adapter
Number of positions	5
No. of cable outlets	1
Coding	A

Insulation characteristics

Overvoltage category	II
Degree of pollution	3

Dimensions

Dimensional drawing	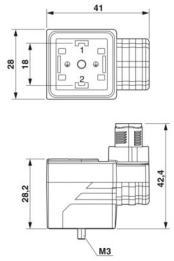
Width	28 mm
Height	42.4 mm
Length	41 mm

Connection data

Connection method	M12 connector
Tightening torque	0.6 Nm (Valve connector)

Electrical properties

Insulation resistance	≥ 100 MΩ
Nominal voltage U_N	24 V AC
	24 V DC
Nominal current I_N	4 A
Protective circuit	unwired

Valve connector characteristics

Fixing screws	M3 x 29

Mechanical properties

Mechanical data

Insertion/withdrawal cycles	50 (Valve connector)
	≥ 100 (M12 connector)

Material specifications

Flammability rating according to UL 94	HB
Seal material	TPU (Seal molded)
Material housing valve plug	TPU
Contact material	CuSn
Contact surface material	Ni/Au
Contact carrier material	PA 66
Contact material	CuSn
Valve plug contact insert material	PA 6.6
Contact surface material	Sn
Material for screw connection	Zinc die-cast, nickel-plated

Signaling

Status display	2 LEDs
Status display present	yes

Connector

Connection 1

Type	Plug straight M12 SPEEDCON
Number of positions	5
Locking type	SPEEDCON
Coding type	A

Connection 2

Type	Valve connector AD (pressure switch)
Number of positions	5
Material	CuSn (Contact)
	Sn (Contact surface)
	PA 6.6 (Contact carrier)
	TPU (Housing)

Environmental and real-life conditions

Ambient conditions

Degree of protection	IP65
	IP67
Ambient temperature (operation) (Valve connector)	-25 °C ... 85 °C (Valve connector)

Standards and regulations

M12

Standard designation	M12 connector
Standards/specifications	IEC 61076-2-101

Valve connector

Standard designation	Valve connector
Standards/specifications	EN 175301-803

Drawings

Dimensional drawing

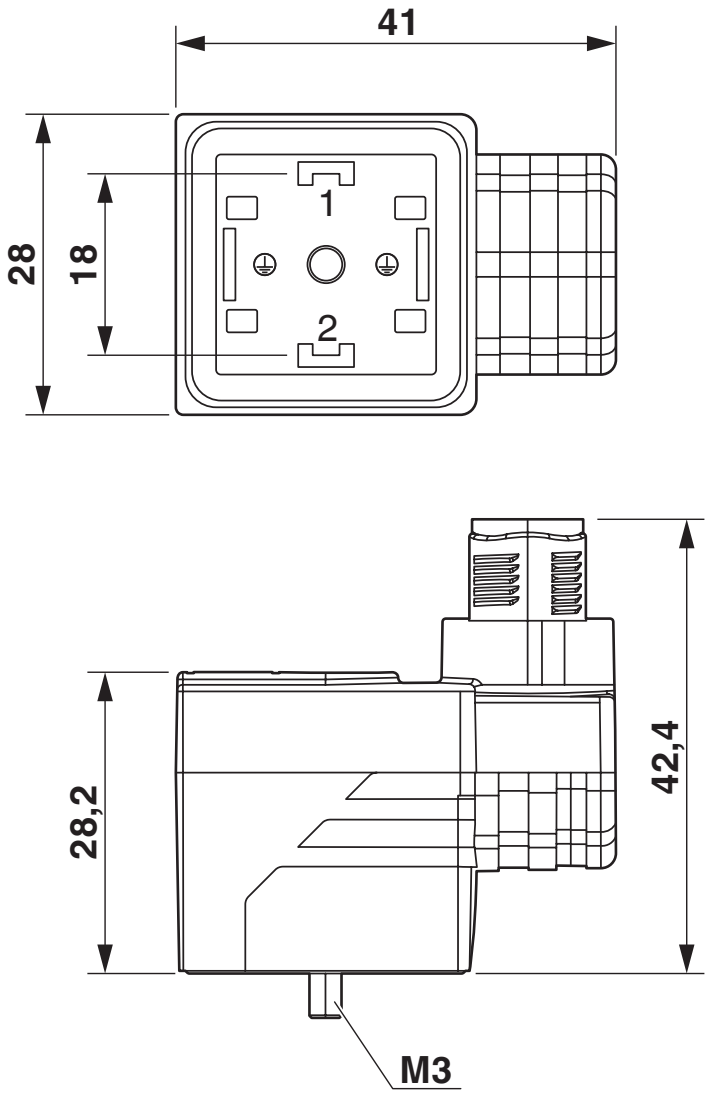

Schematic diagram

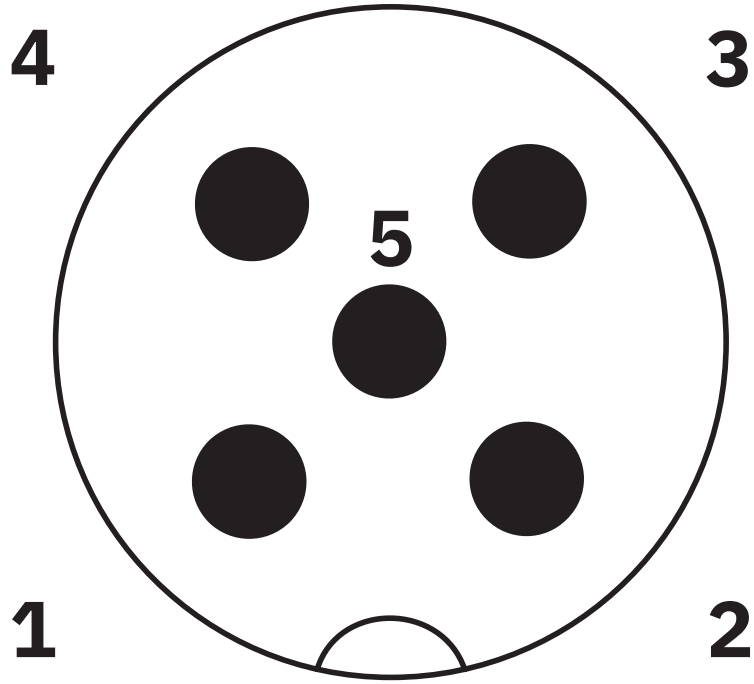

Pin assignment M12 male connector, 5-pos., A-coded, male side

Schematic diagram

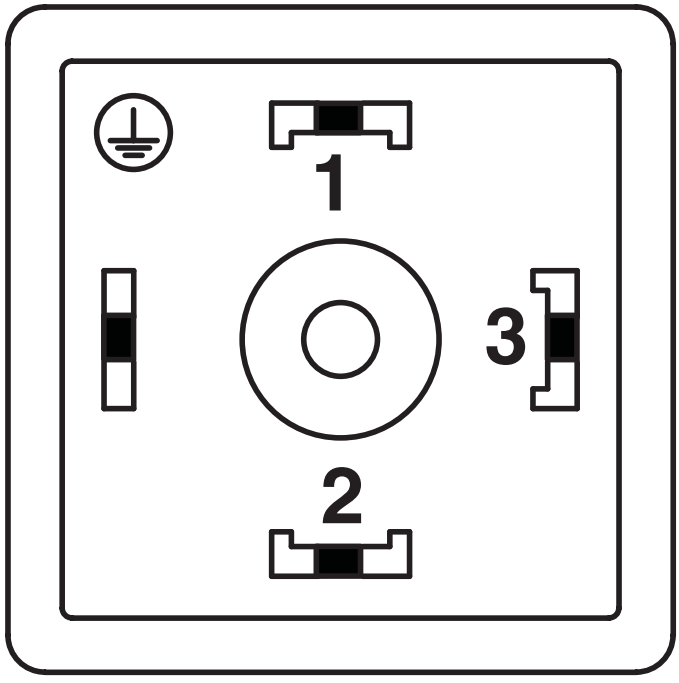

Valve plug connector pin assignment, type AD

Circuit diagram

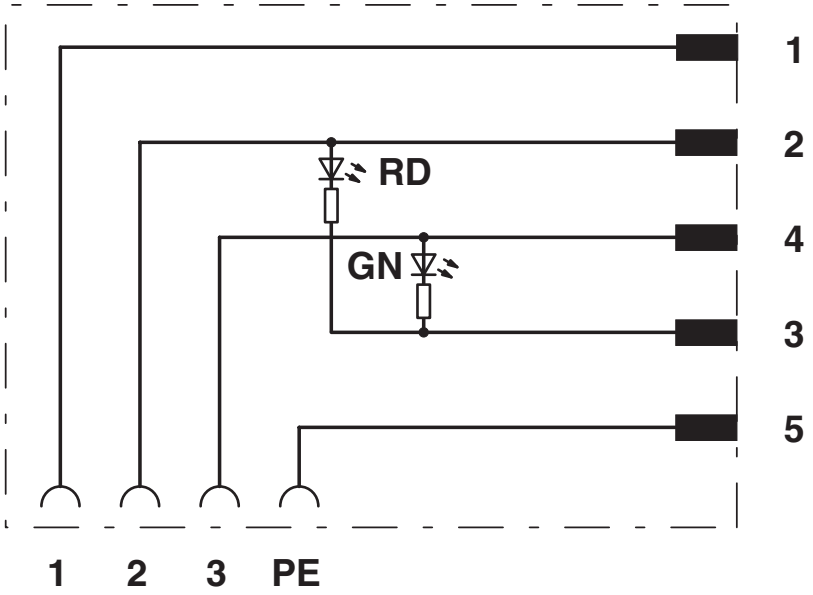

Contact assignment of M12 plug and valve connector

Approvals

To download certificates, visit the product detail page: https://www.phoenixcontact.com/us/products/1458596

DNV
Approval ID: TAE00002K4

EAC
Approval ID: RU C-DE.AI30.B.01102

CSAus
Approval ID: 13631

	Nominal voltage U_N	Nominal current I_N	Cross section AWG	Cross section mm^2
keine				
	24 V	4 A	-	-

Classifications

ECLASS

ECLASS-13.0	27440105
ECLASS-15.0	27440105

ETIM

ETIM 10.0	EC003623

UNSPSC

UNSPSC 21.0	31251500

Environmental product compliance

EU RoHS

Fulfills EU RoHS substance requirements	Yes, No exemptions

China RoHS

Environment friendly use period (EFUP)	EFUP-E
	No hazardous substances above the limits

EU REACH SVHC

REACH candidate substance (CAS No.)	No substance above 0.1 wt%

EF3.1 Climate Change

CO2e kg	41.195 kg CO2e

Phoenix Contact 2026 © - all rights reserved
https://www.phoenixcontact.com

Phoenix Contact USA
586 Fulling Mill Road
Middletown, PA 17057, United States
(+717) 944-1300
info@phoenixcon.com