SACC-MINMR-5CON-PG13/2,5 - Connector

1456255

https://www.phoenixcontact.com/us/products/1456255

Please be informed that the data shown in this PDF document is generated from our online catalog. Please find the complete data in the user documentation. Our general terms of use for downloads are valid.



Connector, Universal, 5-position, Plug angled 7/8"-16UNF, coding: A, Screw connection, knurl material: Zinc die-cast, nickel-plated, cable gland Pg13,5, external cable diameter 10 mm ... 12 mm, Contact 3 capacitive

Your advantages

- Safe use in the field, thanks to a high degree of protection
- Screw connection: proven connection technology for a large selection of different conductors

Commercial data

Item number	1456255
Packing unit	1 pc
Minimum order quantity	1 pc
Sales key	BF30
Product key	AF2FAA
GTIN	4046356616881
Weight per piece (including packing)	64 g
Weight per piece (excluding packing)	50 g
Customs tariff number	85366990
Country of origin	DE

Technical data

Notes

Assembly note	NOTE: Observe the permissible bending radii when routing cables, since the degree of protection may be at risk if the bending forces are too high. Reduce mechanical loads upstream of the connector, e.g., by using cable ties.

Mounting

Assembly note	The wires can be connected both with ferrules and without ferrules

Product properties

Product type	Circular connector (cable-side)
Number of positions	5
No. of cable outlets	1
Shielded	no
Coding	A
Cable outlet	angled
Pg screw connection	Pg13,5

Insulation characteristics

Overvoltage category	III
Degree of pollution	3

Dimensions

Dimensional drawing	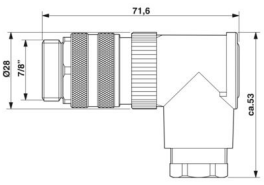
Width	28 mm
Height	53 mm
Length	71.6 mm

External dimensions

Outside diameter	10 mm ... 12 mm

Housing

Diameter housing	28 mm

Material specifications

Flammability rating according to UL 94	HB
Material of grip body	PBT
Contact material	CuZn

Contact surface material	Au
Contact carrier material	PUR/PA 6.6
Material for screw connection	Zinc die-cast, nickel-plated

Connection data

Conductor connection

Connection method	Screw connection
Connection cross section	0.34 mm² ... 2.5 mm² (without ferrule)
	0.34 mm² ... 2.5 mm² (with ferrule)
	0.34 mm² ... 2.5 mm² (solid)
Connection cross section AWG	22 ... 14 (without ferrule)
	22 ... 14 (with ferrule)
Stripping length of the individual wire	7 mm
Tightening torque	0.8 Nm (7/8" connectors)
	0.4 Nm (Screw terminal blocks)
	1 Nm ... 1.4 Nm (Pressure screw)

Electrical properties

Rated surge voltage	4 kV
Insulation resistance	≥ 100 MΩ
Nominal voltage U_N	300 V AC
	300 V DC
Nominal current I_N	9 A

Mechanical properties

Mechanical data

Insertion/withdrawal cycles	≥ 100

Connector

Connection 1

Head design	Plug
Head cable outlet	angled
Head thread type	7/8"-16UNF
Coding	A

Interfaces

Signal type/category	Universal

Environmental and real-life conditions

Ambient conditions

Degree of protection	IP67
Ambient temperature (operation) (male connector/female connector)	-25 °C ... 85 °C (Plug / socket)

Drawings

Dimensional drawing

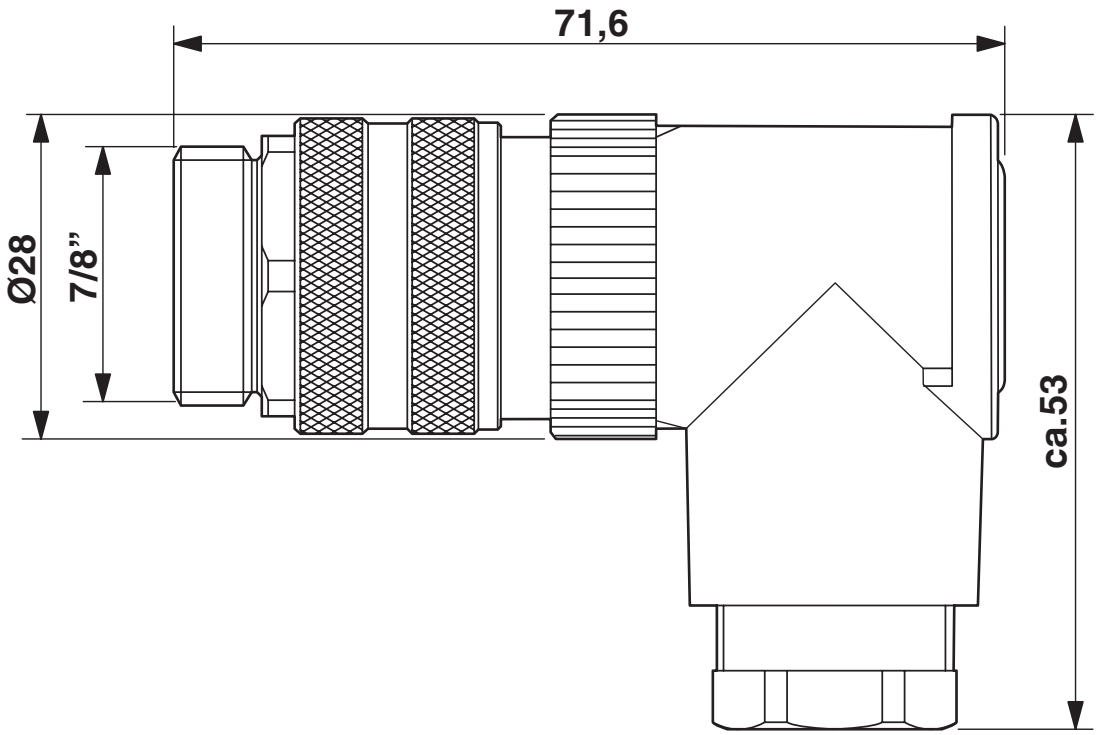

7/8" plug, angled

Functional drawing

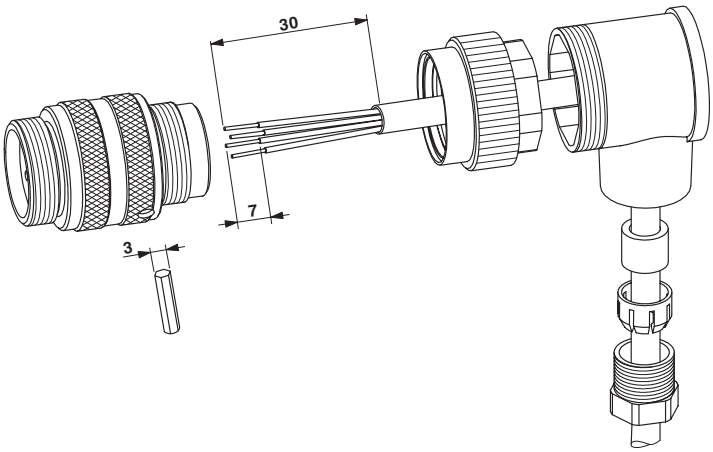

Schematic diagram

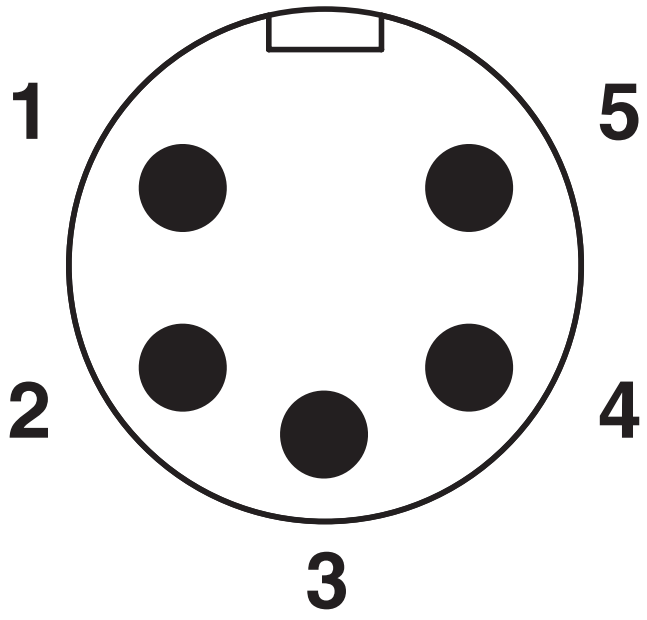

Pin assignment, plug, 7/8"-16UNF, 5-pos., view of male side

Approvals

To download certificates, visit the product detail page: https://www.phoenixcontact.com/us/products/1456255

cUL Recognized
Approval ID: FILE E 221474

	Nominal voltage U_N	Nominal current I_N	Cross section AWG	Cross section mm^2
keine				
	600 V	16 A	-	-

UL Recognized
Approval ID: FILE E 221474

	Nominal voltage U_N	Nominal current I_N	Cross section AWG	Cross section mm^2
keine				
	600 V	16 A	-	-

Classifications

ECLASS

ECLASS-13.0	27440116
ECLASS-15.0	27440116

ETIM

ETIM 10.0	EC002635

UNSPSC

UNSPSC 21.0	39121400

Environmental product compliance

EU RoHS

Fulfills EU RoHS substance requirements	Yes
Exemption	6(c)

China RoHS

Environment friendly use period (EFUP)	EFUP-50
	An article-related China RoHS declaration table can be found in the download area for the respective article under "Manufacturer declaration". For all articles with EFUP-E, no China RoHS declaration table issued and required.

EU REACH SVHC

REACH candidate substance (CAS No.)	Lead(CAS: 7439-92-1)
SCIP	1fbaec11-ae3f-48f7-a797-68c0c1aeee03

EF3.1 Climate Change

CO2e kg	2.621 kg CO2e

Phoenix Contact 2026 © - all rights reserved
https://www.phoenixcontact.com

Phoenix Contact USA
586 Fulling Mill Road
Middletown, PA 17057, United States
(+717) 944-1300
info@phoenixcon.com