VS-M12MSD-IP20-LI-93P/10,0 - Network cable

1445279

https://www.phoenixcontact.com/us/products/1445279

Please be informed that the data shown in this PDF document is generated from our online catalog. Please find the complete data in the user documentation. Our general terms of use for downloads are valid.



Assembled Ethernet cable, CAT5e, shielded, 2-pair, 26 AWG stranded (7-wire), RAL 5021 (water blue), M12 plug to RJ45 plug/IP20, line, length: 10 m

Commercial data

Item number	1445279
Packing unit	1 pc
Minimum order quantity	25 pc
Note	Made to order (non-returnable)
Product key	AF1CJI
GTIN	4046356582643
Weight per piece (including packing)	480 g
Weight per piece (excluding packing)	491.3 g
Country of origin	PL

Technical data

Product properties

Product type	Data cable preassembled
Number of positions	4
No. of cable outlets	1
Number of slots	1
Shielded	yes

Insulation characteristics

Degree of pollution	3

Interfaces

Bus system	Ethernet
Signal type/category	Ethernet CAT5 (IEC 11801:2002)

Electrical properties

Nominal voltage U_N	48 V AC
	60 V DC
Transmission characteristics (category)	CAT5 (IEC 11801:2002)

Mechanical properties

Mechanical data

Insertion/withdrawal cycles	≥ 100

Material specifications

Flammability rating according to UL 94	V2
Outer sheath, material	PVC

Connector

Connection 1

Type	Plug straight M12

Connection 2

Type	free cable end

Cable/line

Cable length	10 m
Cable type	Ethernet
Cable structure	2x2xAWG26/7, SF/UTP
External cable diameter	6.40 mm
Outer sheath, material	PVC
External sheath, color	water blue RAL 5021
Wire diameter incl. insulation	1 mm

Single wire, color	white/orange-orange, white/green-green
Cable cross section	0.14 mm²
Conductor structure signal line	7x 0.15 mm
AWG signal line	26
Smallest bending radius, fixed installation	25 mm
Smallest bending radius, movable installation	25 mm (Cable, flexible installation)

Environmental and real-life conditions

Ambient conditions

Ambient temperature (operation)	-25 °C ... 60 °C (cable, fixed installation)
	-5 °C ... 50 °C (Cable, flexible installation)

Drawings

Dimensional drawing

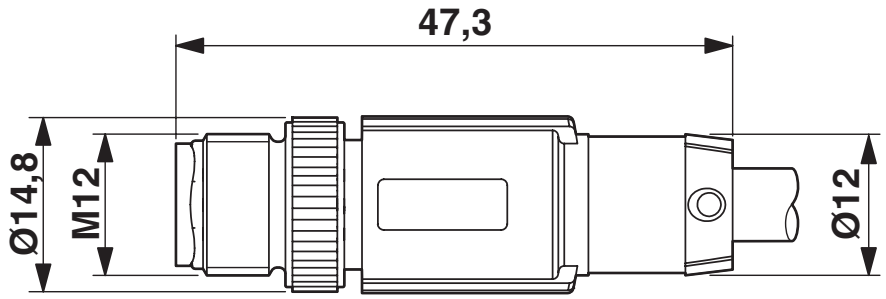

Plug, M12 x 1, straight, shielded

Dimensional drawing

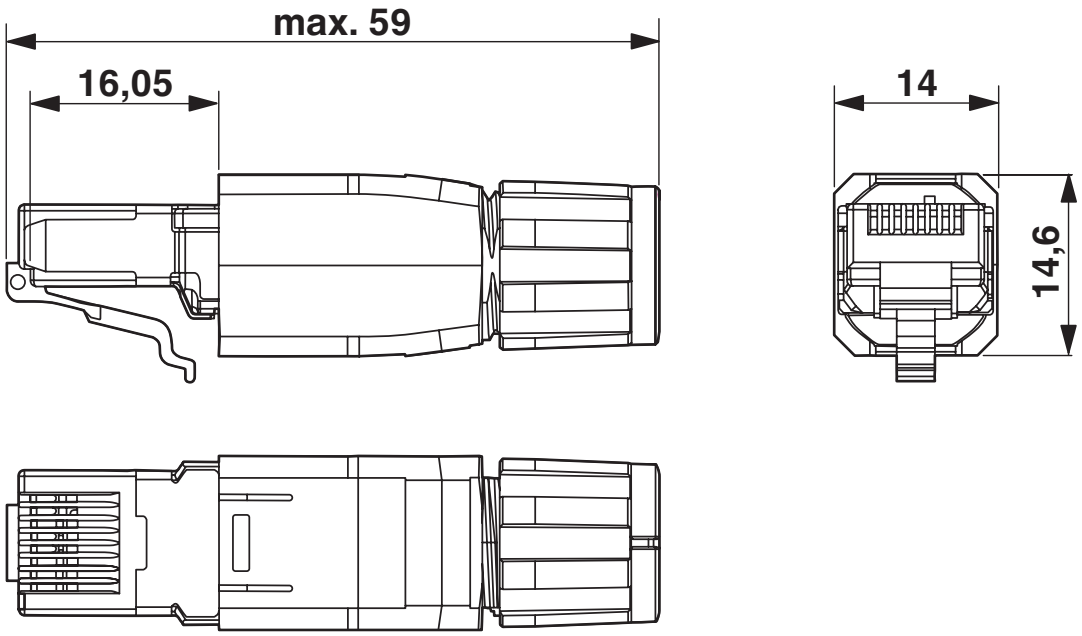

RJ45 connector, IP20

Classifications

ECLASS

ECLASS-13.0	27060307
ECLASS-15.0	27060307

ETIM

ETIM 10.0	EC002599

UNSPSC

UNSPSC 21.0	26121600

Environmental product compliance

EU RoHS

Fulfills EU RoHS substance requirements	Yes, No exemptions

China RoHS

Environment friendly use period (EFUP)	EFUP-E
	No hazardous substances above the limits

EU REACH SVHC

REACH candidate substance (CAS No.)	2-(2H-benzotriazol-2-yl)-4-(1,1,3,3-tetramethylbutyl)phenol (UV-329)(CAS: 3147-75-9)

EF3.1 Climate Change

CO2e kg	6.993 kg CO2e

Phoenix Contact 2026 © - all rights reserved
https://www.phoenixcontact.com

Phoenix Contact USA
586 Fulling Mill Road
Middletown, PA 17057, United States
(+717) 944-1300
info@phoenixcon.com