PSR-SPP- 24DC/URM4/5X1/2X2 - Extension module

1442026

https://www.phoenixcontact.com/us/products/1442026

Please be informed that the data shown in this PDF document is generated from our online catalog. Please find the complete data in the user documentation. Our general terms of use for downloads are valid.



Single-channel or two-channel contact extension, 5 N/O contacts, 1 N/C contact, 1 confirmation current path, together with basic device up to Cat. 4 PL e in accordance with EN ISO 13849 safe isolation, width: 35 mm, pluggable Push-in terminal block

Your advantages

- Five enabling, one signaling, and one confirmation current path
- 1- and 2-channel control
- Up to Cat. 4/PL e in accordance with EN ISO 13849-1, SIL 3 in accordance with EN IEC 62061, SIL 3 in accordance with IEC 61508

ELEKTROGERÄTE RÜCKNAHME

Commercial data

Item number	1442026
Packing unit	1 pc
Minimum order quantity	1 pc
Sales key	DN01
Product key	DNA152
GTIN	4063151822996
Weight per piece (including packing)	253.811 g
Weight per piece (excluding packing)	227.16 g
Customs tariff number	85371098
Country of origin	DE

Technical data

Notes

Note on application

Note on application	Only for industrial use

Product properties

Product type	Safety relays
Product family	PSRclassic
Application	Extension module
Control	1 and 2 channel
Mechanical service life	approx. 10^7 cycles
Relay type	Electromechanical relay with force-guided contacts in accordance with IEC/EN 61810-3

Insulation characteristics

Overvoltage category	III
Degree of pollution	2

Times

Typ. starting time with U_s	< 25 ms (at Us / when controlled via A11/A12)
Typical release time	< 20 ms (at Us / when controlled via A11/A12)
Recovery time	< 1 s

Electrical properties

Maximum power dissipation for nominal condition	16.7 W (U_S = 26.4 V, I_L^2 = 72 A², $P_{Total\ max}$ = 1.4 W + 14.4 W)
Nominal operating mode	100% operating factor
Rated insulation voltage	250 V
Rated surge voltage/insulation	See data sheet, section “Insulation coordination”.

Input data

General

Maximum switching frequency	1 Hz

Digital: A11, A12

Description of the input	safety-related
Number of inputs	2
Input voltage range "1" signal	19.2 V ... 26.4 V DC
Max. permissible overall conductor resistance	50 Ω
Protective circuit	Suppressor diode
Current consumption	typ. 39 mA

Output data

Relay: Enabling current paths (23/24 ... 63/64)

Output description	2 N/O contacts each in series, safety-related, floating
Number of outputs	5
Contact switching type	5 enabling current paths
Contact material	$AgSnO_2$
Switching voltage	min. 10 V
	max. 250 V AC/DC
Switching power	min. 100 mW
Inrush current	min. 10 mA
	max. 6 A
Switching capacity	3 A (AC15)
	5 A (DC13)
Limiting continuous current	6 A (observe derating)
Sq. Total current	72 A^2 (observe derating)
Switching frequency	max. 1 Hz
Mechanical service life	10x 10^6 cycles
Output fuse	10 A gL/gG
	4 A gL/gG (for low-demand applications)

Relay: Signaling current path (71/72)

Output description	2 N/C contacts parallel, non-safety-related, floating
Number of outputs	1
Contact switching type	1 signaling current path
Contact material	$AgSnO_2$
Switching voltage	min. 5 V AC/DC
	max. 250 V AC/DC
Switching power	min. 50 mW
Inrush current	min. 10 mA
	max. 6 A
Switching capacity	1.5 A (AC15)
	5 A (DC13)
Limiting continuous current	6 A
Sq. Total current	36 A^2
Switching frequency	max. 1 Hz
Mechanical service life	10x 10^6 cycles
Output fuse	6 A (gL/gG)

Relay: Confirmation current path (11/12)

Output description	2 N/C contacts in series, floating
Number of outputs	1
Contact switching type	1 confirmation current path
Contact material	$AgSnO_2$
Switching voltage	max. 250 V AC/DC
	min. 10 V
Switching power	min. 100 mW
Inrush current	max. 3 A

Switching capacity	1.5 A (AC15)
	3 A (DC13)
Limiting continuous current	3 A
Sq. Total current	9 A^2
Switching frequency	max. 1 Hz
Output fuse	3 A (gL/gG)

Connection data

Connection technology

pluggable	yes

Conductor connection

Connection method	Push-in connection
Conductor cross-section rigid	0.2 mm² ... 1.5 mm²
Conductor cross-section flexible	0.2 mm² ... 1.5 mm²
Conductor cross-section, flexible, with ferrule, with plastic sleeve	0.25 mm² ... 1.5 mm² (only together with CRIMPFOX 6)
Conductor cross-section, flexible, with ferrule, without plastic sleeve	0.25 mm² ... 1.5 mm² (only together with CRIMPFOX 6)
Conductor cross-section AWG	24 ... 16
Stripping length	8 mm

Signaling

Operating voltage display	2 x green LED

Dimensions

Width	35 mm
Height	112 mm
Depth	114.5 mm

Material specifications

Color (Housing)	yellow (RAL 1018)
Housing material	PA

Characteristics

Safety data

Stop category (EN 60204-1)	0

Safety data: EN ISO 13849

Performance level (PL)	e (In conjunction with suitable evaluating device)

Safety data: IEC 61508 - High demand

Safety Integrity Level (SIL)	3 (In conjunction with suitable evaluating device)

Safety data: IEC 61508 - Low demand

Safety Integrity Level (SIL)	3 (In conjunction with suitable evaluating device)

Safety data: EN IEC 62061

Safety Integrity Level (SIL)	3 (In conjunction with suitable evaluating device)

Environmental and real-life conditions

Ambient conditions

Degree of protection	IP20
Min. degree of protection of inst. location	IP54
Ambient temperature (operation)	-20 °C ... 55 °C (observe derating)
Ambient temperature (storage/transport)	-40 °C ... 70 °C
Maximum altitude	≤ 2000 m (Above sea level)
Max. permissible humidity (storage/transport)	75 % (on average, 85% infrequently, non-condensing)
Max. permissible relative humidity (operation)	75 % (on average, 85% infrequently, non-condensing)
Shock	15g
Vibration (operation)	10 Hz ... 150 Hz, amplitude 0.15 mm, 2g

Approvals

CE

Identification	CE-compliant

Mounting

Mounting type	DIN rail mounting
Assembly note	Observe derating
Mounting position	vertical or horizontal

Drawings

Circuit diagram

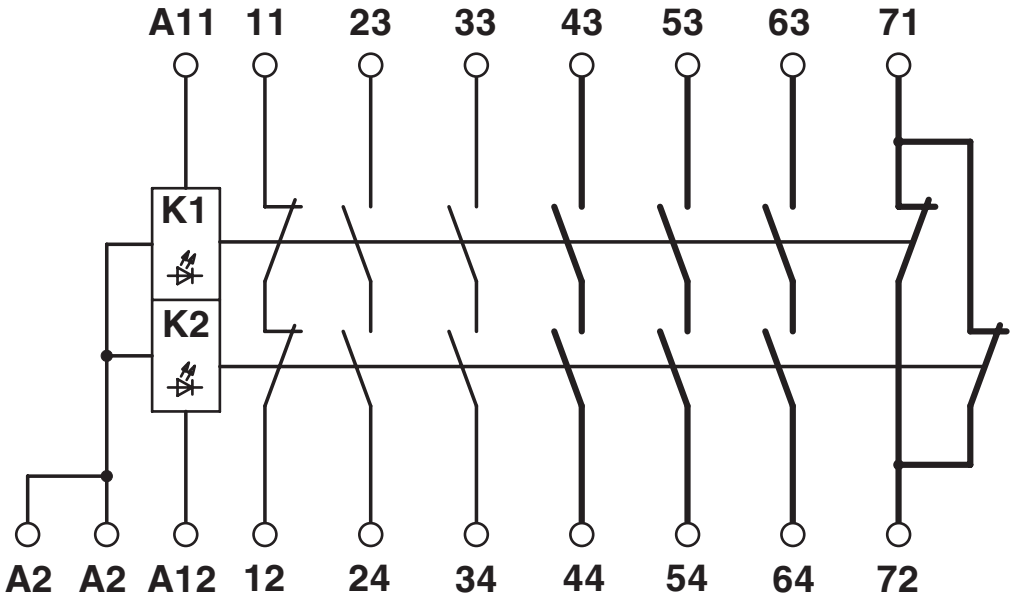

Block diagram

Circuit diagram

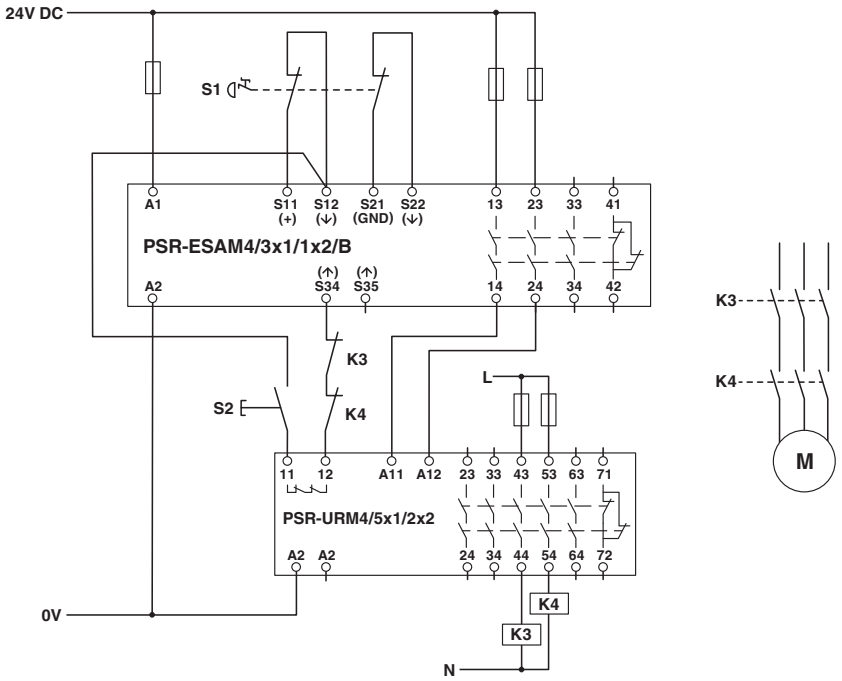

Two-channel connection with integration of the confirmation current path and externally monitored contacts

Approvals

To download certificates, visit the product detail page: https://www.phoenixcontact.com/us/products/1442026

cULus Listed
Approval ID: E140324

cULus Listed
Approval ID: E140324

Functional Safety
Approval ID: 968/FSP 2533.00/23

Functional Safety
Approval ID: 968/FSP 2533.00/23

Classifications

ECLASS

ECLASS-13.0	27371819
ECLASS-15.0	27371819
ECLASS-15.0 ASSET	27250101

ETIM

ETIM 10.0	EC001449

UNSPSC

UNSPSC 21.0	39122200

Environmental product compliance

EU RoHS

Fulfills EU RoHS substance requirements	Yes
Exemption	7(a), 7(c)-I

China RoHS

Environment friendly use period (EFUP)	EFUP-50
	An article-related China RoHS declaration table can be found in the download area for the respective article under "Manufacturer declaration". For all articles with EFUP-E, no China RoHS declaration table issued and required.

EU REACH SVHC

REACH candidate substance (CAS No.)	Lead(CAS: 7439-92-1)
SCIP	21ee64b6-30a2-4280-af6d-5268e59605f4

EF3.1 Climate Change

CO2e kg	6.776 kg CO2e

Phoenix Contact 2026 © - all rights reserved
https://www.phoenixcontact.com

Phoenix Contact USA
586 Fulling Mill Road
Middletown, PA 17057, United States
(+717) 944-1300
info@phoenixcon.com