SACC-M 8FS-4QO-0,5-M - Connector

1441079

https://www.phoenixcontact.com/us/products/1441079

Please be informed that the data shown in this PDF document is generated from our online catalog. Please find the complete data in the user documentation. Our general terms of use for downloads are valid.



Connector, Universal, 4-position, Socket straight M8, coding: A, Insulation displacement connection, knurl material: Zinc die-cast, nickel-plated, external cable diameter 2.5 mm ... 5 mm

Your advantages

- Safe use in the field, thanks to a high degree of protection
- Insulation displacement connection: innovative and time-saving assembly without stripping the single wire

Commercial data

Item number	1441079
Packing unit	1 pc
Minimum order quantity	1 pc
Sales key	BF31
Product key	AF2BCA
GTIN	4046356515962
Weight per piece (including packing)	7 g
Weight per piece (excluding packing)	6.5 g
Customs tariff number	85366990
Country of origin	DE

Technical data

Notes

Assembly note	NOTE: Observe the permissible bending radii when routing cables, since the degree of protection may be at risk if the bending forces are too high. Reduce mechanical loads upstream of the connector, e.g., by using cable ties.

Product properties

Product type	Circular connector (cable-side)
Number of positions	4
No. of cable outlets	1
Shielded	no
Coding	A
Cable outlet	straight

Insulation characteristics

Overvoltage category	II
Degree of pollution	3

Dimensions

Dimensional drawing	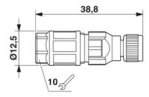
Length	38.8 mm

External dimensions

Outside diameter	2.5 mm ... 5 mm ±0.2 mm

Housing

Diameter housing	12.5 mm

Material specifications

Flammability rating according to UL 94	HB
Seal material	NBR
Material of grip body	PA 6
Contact material	CuSn
Contact surface material	Ni/Au
Contact carrier material	TPU GF
Material for screw connection	Zinc die-cast, nickel-plated
Wire insulation material	PVC / PE / PP / rubber

Connection data

Conductor connection

Connection method	Insulation displacement connection
Connection cross section	0.25 mm² ... 0.5 mm²
Connection cross section AWG	24 ... 20
Tightening torque	0.6 Nm (Pressure nut)
	0.2 Nm (M8 knurl)

Connection assignment

Contact | Color (signal designation) | Contact (optional)	1 = BN
	2 = WH
	3 = BU
	4 = BK

Electrical properties

Rated surge voltage	0.8 kV
Insulation resistance	≥ 100 MΩ
Nominal voltage U_N	30 V AC
	30 V DC
Nominal current I_N	4 A

Mechanical properties

Mechanical data

Insertion/withdrawal cycles	≥ 100

Connector

Connection 1

Head design	Socket
Head cable outlet	straight
Head thread type	M8
Coding	A

Interfaces

Signal type/category	Universal

Cable/line

External cable diameter	2.5 mm ... 5 mm

Environmental and real-life conditions

Ambient conditions

Degree of protection	IP65
	IP67
Ambient temperature (operation) (male connector/female connector)	-25 °C ... 80 °C (Plug / socket)

Standards and regulations

M8

Standard designation	M8 connector
Standards/specifications	IEC 61076-2-104

Drawings

Dimensional drawing

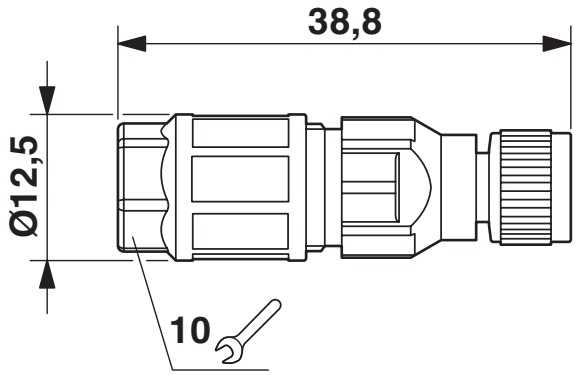

Socket M8 x 1, straight

Functional drawing

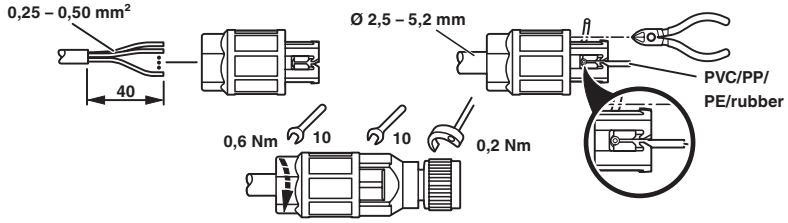

Schematic diagram

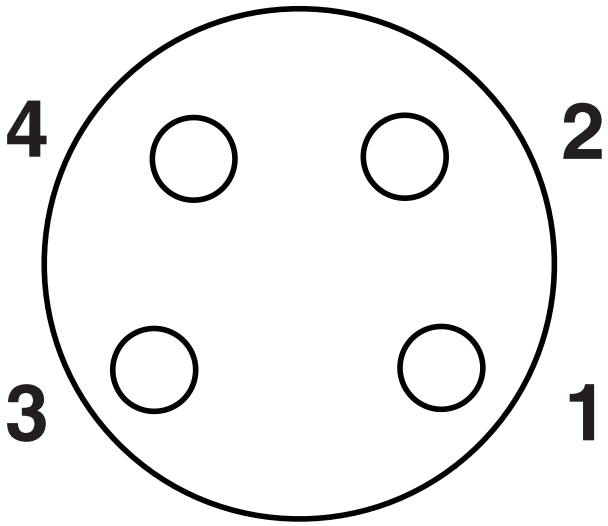

Pin assignment of M8 socket, 4-pos., view of pin side

Approvals

To download certificates, visit the product detail page: https://www.phoenixcontact.com/us/products/1441079

cUL Recognized
Approval ID: E118976

	Nominal voltage U_N	Nominal current I_N	Cross section AWG	Cross section mm^2
keine				
	29 V	4 A	24 - 20	-

UL Recognized
Approval ID: E118976

	Nominal voltage U_N	Nominal current I_N	Cross section AWG	Cross section mm^2
keine				
	29 V	4 A	24 - 20	-

EAC
Approval ID: RU C-DE.AI30.B.01102

Classifications

ECLASS

ECLASS-13.0	27440116
ECLASS-15.0	27440116

ETIM

ETIM 10.0	EC002635

UNSPSC

UNSPSC 21.0	39121400

Environmental product compliance

EU RoHS

Fulfills EU RoHS substance requirements	Yes, No exemptions

China RoHS

Environment friendly use period (EFUP)	EFUP-E
	No hazardous substances above the limits

EU REACH SVHC

REACH candidate substance (CAS No.)	No substance above 0.1 wt%

EF3.1 Climate Change

CO2e kg	0.572 kg CO2e

Phoenix Contact 2026 © - all rights reserved
https://www.phoenixcontact.com

Phoenix Contact USA
586 Fulling Mill Road
Middletown, PA 17057, United States
(+717) 944-1300
info@phoenixcon.com