PSR-PE60-3NO-24DC-SC - Coupling relay

1436353

https://www.phoenixcontact.com/us/products/1436353

Please be informed that the data shown in this PDF document is generated from our online catalog. Please find the complete data in the user documentation. Our general terms of use for downloads are valid.



Coupling relay for SIL 3 high-demand and low-demand applications, couples digital output signals to the I/O, 3 enabling current paths, safe state off and safe state on applications, test pulse filter, plug-in screw terminal block

Commercial data

Item number	1436353
Packing unit	1 pc
Minimum order quantity	1 pc
Product key	DN1123
GTIN	4063151813055
Weight per piece (including packing)	129.13 g
Weight per piece (excluding packing)	96.98 g
Country of origin	DE

Technical data

Notes

Note on application

Note on application	Only for industrial use

Product properties

Product type	Coupling relay
Product family	PSRclassic
Application	Safe switch off
	Safe switch on
	High demand
	Low demand
Set comprises	1496313 PSR-PE60-3NO-24DC-SC-SET60
Control	1-channel
Relay type	Electromechanical relay in accordance with IEC/EN 61810

Insulation characteristics

Overvoltage category	III
Degree of pollution	2

Times

Typ. starting time with U_s	< 70 ms (with control via control input 3)
Typical release time	< 50 ms (with request via control input 3)
Recovery time	500 ms

Electrical properties

Maximum power dissipation for nominal condition	2.1 W (U_B = 26.4 V, U_S = 24 V, I_S = 31 mA, I_L^2 = 48 A, $R_{contact}$ = 0.025 Ω)
Nominal operating mode	100% operating factor
Rated insulation voltage	250 V AC
Rated surge voltage/insulation	Safe isolation, reinforced insulation 6.4 kV between 250 V load current paths and 24 V logic paths
	Basic insulation 4 kV between all current paths and housing

Supply

Designation	3/4
Rated control circuit supply voltage U_S	24 V DC -10 % ... +10 % (“1” signal)
Rated control supply current I_S	typ. 31 mA
Power consumption at U_S	typ. 745 mW
Inrush current	typ. 200 mA (Δt = 5 ms at U_s)
Filter time	1 ms (in the event of voltage dips at U_s)
Protective circuit	Serial protection against polarity reversal; Suppressor diode, 38. 6 V/600 W

Output data

Relay: Enabling current paths (1/2, 5/6, 7/8)

Output description	1 N/O contact, undelayed, floating
Number of outputs	3 (non-safety-related)
Contact switching type	3 enabling current paths
Contact material	AgSnO2, +AU
Switching voltage	min. 12 V DC
	max. 250 V AC/DC
Switching power	min. 120 mW
Inrush current	min. 10 mA
	max. 4 A
Switching capacity	1.2 A (24 V (DC13))
	1.6 A (230 V (AC15))
Limiting continuous current	4 A
Sq. Total current	48 A^2 (observe derating)
Switching frequency	max. 0.1 Hz
Mechanical service life	10x 10^6 cycles
Output fuse	4 A gL/gG (Safe state OFF application)

Connection data

Connection technology

pluggable	yes

Conductor connection

Connection method	Screw connection
Conductor cross-section rigid	0.2 mm² ... 2.5 mm²
Conductor cross-section flexible	0.2 mm² ... 2.5 mm²
Conductor cross-section AWG	24 ... 12
Stripping length	7 mm
Screw thread	M3
Tightening torque	0.5 Nm ... 0.6 Nm

Signaling

Status display	1 x LED (green)

Dimensions

Width	12.5 mm
Height	99 mm
Depth	114.5 mm

Material specifications

Color (Housing)	gray (RAL 7042)
Housing material	PA

Characteristics

Safety data

Stop category (EN 60204-1)	0

Safety data: EN 50156

Safety Integrity Level (SIL)	3

Safety data: IEC 61508 - high demand / safe state OFF

Safety Integrity Level (SIL)	3

Safety data: IEC 61508 - low demand / safe state OFF

Safety Integrity Level (SIL)	3

Safety data: IEC 61508 - low demand/safe state ON

Safety Integrity Level (SIL)	3

Environmental and real-life conditions

Ambient conditions

Degree of protection	IP20
Min. degree of protection of inst. location	IP54
Ambient temperature (operation)	-40 °C ... 70 °C (observe derating)
Ambient temperature (storage/transport)	-40 °C ... 85 °C
Maximum altitude	≤ 2000 m (Above sea level)
Max. permissible humidity (storage/transport)	75 % (on average, 85% infrequently, non-condensing)
Max. permissible relative humidity (operation)	75 % (on average, 85% infrequently, non-condensing)
Shock	15g
Vibration (operation)	10 Hz ... 150 Hz, 2g

Approvals

CE

Identification	CE-compliant

Mounting

Mounting type	DIN rail mounting
Assembly note	See derating curve
Mounting position	vertical or horizontal

Drawings

Circuit diagram

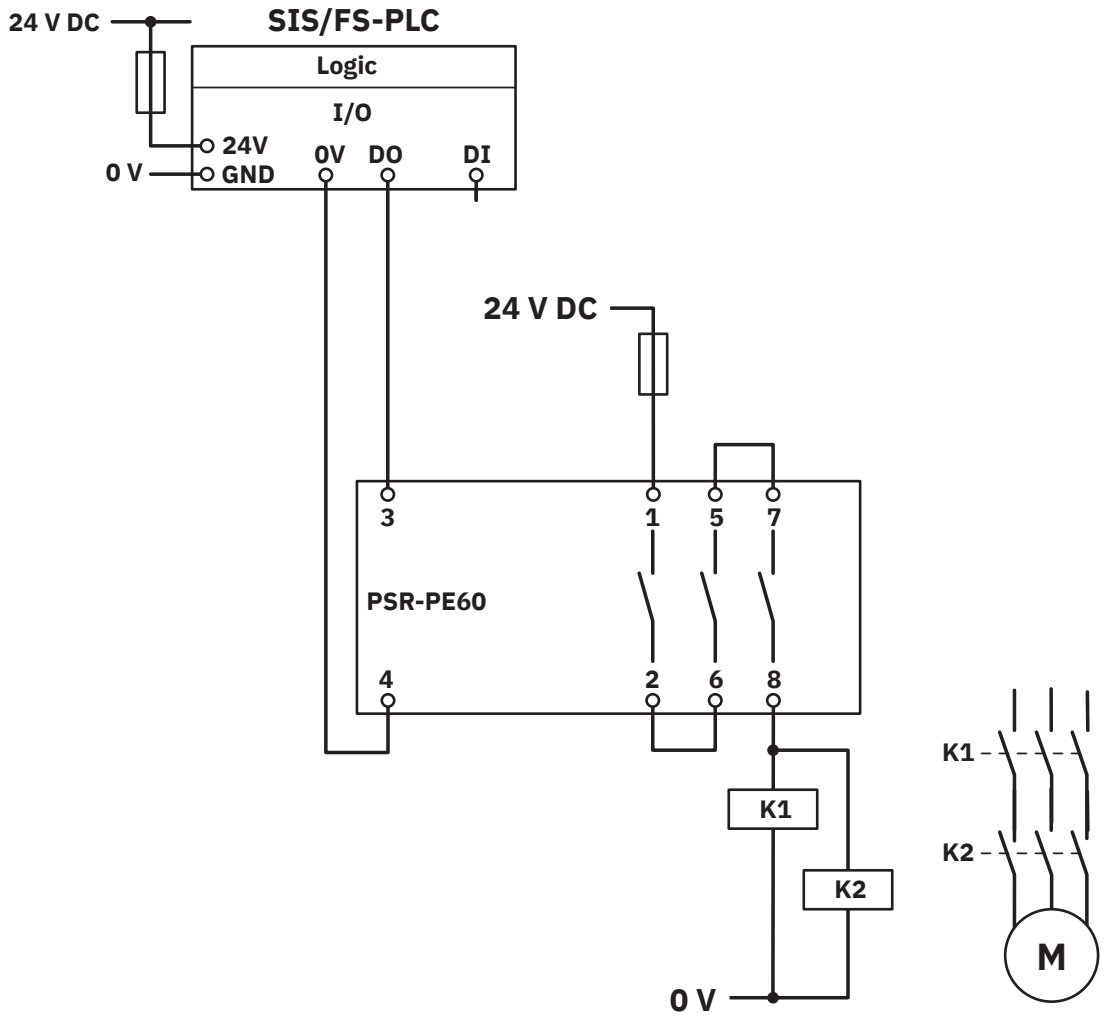

Example application

Circuit diagram

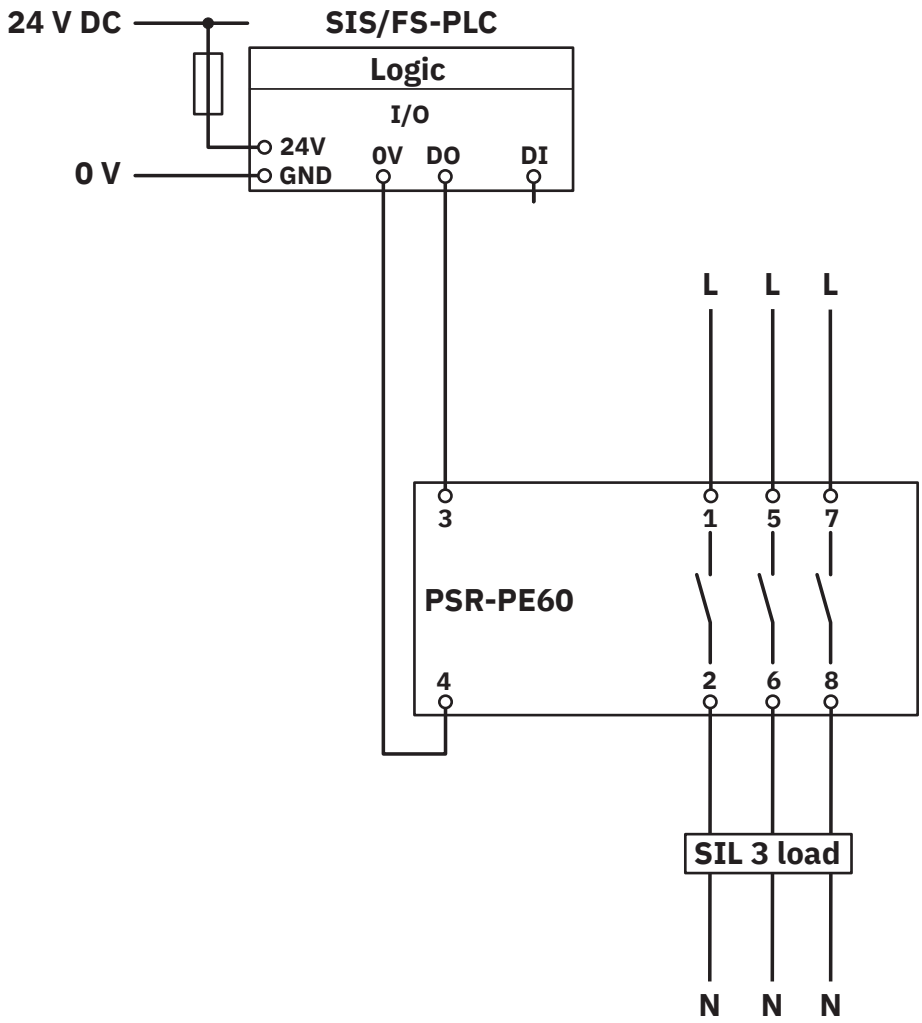

Example application

Block diagram

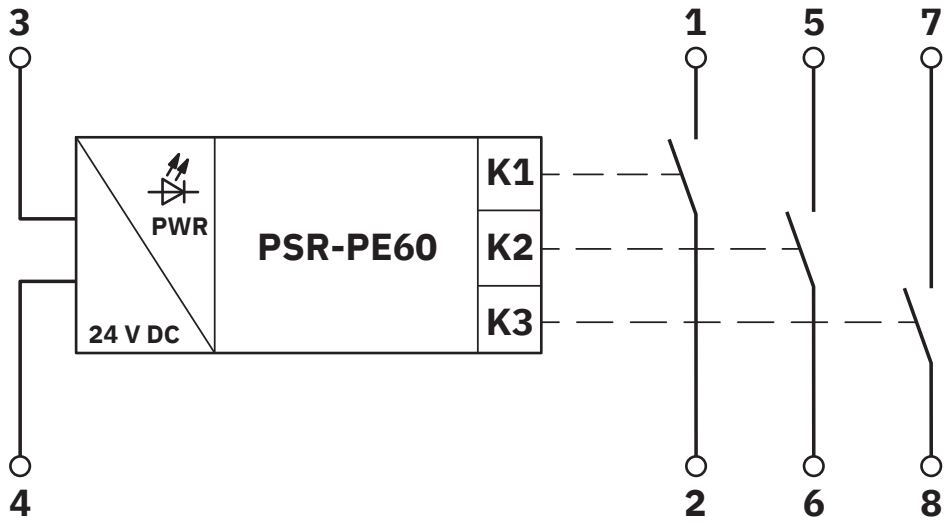

Block diagram

Approvals

To download certificates, visit the product detail page: https://www.phoenixcontact.com/us/products/1436353

Functional Safety
Approval ID: 4478015124330

cULus Listed
Approval ID: E140324

Classifications

ECLASS

ECLASS-13.0	27371819
ECLASS-15.0	27371819

ETIM

ETIM 10.0	EC001449

Environmental product compliance

EU RoHS

Fulfills EU RoHS substance requirements	Yes
Exemption	7(a), 7(a)-I, 7(c)-I

China RoHS

Environment friendly use period (EFUP)	EFUP-50
	An article-related China RoHS declaration table can be found in the download area for the respective article under "Manufacturer declaration". For all articles with EFUP-E, no China RoHS declaration table issued and required.

EU REACH SVHC

REACH candidate substance (CAS No.)	Lead(CAS: 7439-92-1)

Phoenix Contact 2026 © - all rights reserved
https://www.phoenixcontact.com

Phoenix Contact USA
586 Fulling Mill Road
Middletown, PA 17057, United States
(+717) 944-1300
info@phoenixcon.com