SAC-4P-15,0-960/M12FS VA - Bus system cable

1431241

https://www.phoenixcontact.com/us/products/1431241

Please be informed that the data shown in this PDF document is generated from our online catalog. Please find the complete data in the user documentation. Our general terms of use for downloads are valid.

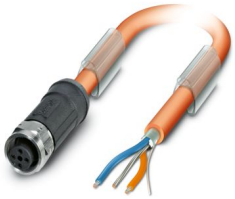

Bus system cable, FOUNDATION Fieldbus (31.25 kbps), 3-position, PVC, orange RAL 2003, shielded, free cable end, on Socket straight M12, coding: A, cable length: 15 m

Commercial data

Item number	1431241
Packing unit	1 pc
Minimum order quantity	1 pc
Sales key	BF04
Product key	AF1CCG
GTIN	4046356431729
Weight per piece (including packing)	986.5 g
Weight per piece (excluding packing)	986.5 g
Customs tariff number	85444290
Country of origin	PL

Technical data

Notes

General	Further products with variable cable type and variable cable length can be found in the accessories section

Product properties

Product type	Data cable preassembled
Application	Process technology
Number of positions	3
No. of cable outlets	1
Shielded	yes
Coding	A

Insulation characteristics

Overvoltage category	II
Degree of pollution	3

Interfaces

Bus system	FOUNDATION Fieldbus
Signal type/category	FOUNDATION Fieldbus, 31.25 kbps

Signaling

Status display	no
Status display present	no

Electrical properties

Insulation resistance	≥ 100 MΩ
Nominal voltage U_N	48 V AC
	60 V DC
Nominal current I_N	4 A
Transmission medium	Copper
Transmission speed	31.25 kbps

Mechanical properties

Mechanical data

Insertion/withdrawal cycles	≥ 100

Material specifications

Flammability rating according to UL 94	HB
Seal material	NBR

Connection data

Connection assignment

Contact | Color (signal designation) | Contact (optional)	1 (Socket) | BU (DATA-)
	2 (Socket) | OG (DATA+)
	3 (Socket) | SR (shield)

Connector

Connection 1

Type	free cable end

Connection 2

Type	free cable end

Cable/line

Cable length	15 m

FOUNDATION Fieldbus orange [960]

Dimensional drawing	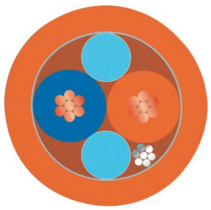
Cable weight	56.552 kg/km
Number of positions	2
Shielded	yes
Cable type	FOUNDATION Fieldbus orange [960]
Conductor structure	2xAWG18/7 + 1xAWG20/7
Signal speed	0.66 c
Conductor structure signal line	7x 0.40 mm
AWG signal line	18
Conductor cross-section	2x 0.75 mm² (Signal line)
	1x 0.5 mm² (Drain wire)
Wire diameter incl. insulation	2.24 mm ±0.05 mm
External cable diameter	7.50 mm ±0.25 mm
Outer sheath, material	PVC
External sheath, color	orange RAL 2003
Conductor material	Tin-plated Cu litz wires
Material wire insulation	PO (Signal line)
Single wire, color	blue, orange
Thickness, insulation	0.50 mm
Thickness, outer sheath	1.00 mm
Twisted pairs	2 cores to the pair
Overall twist	One pair with one drain wire and fillers for core

Optical shield covering	100 %
Max. conductor resistance	≤ 19.35 Ω/km (Signal line)
	26 Ω/km (shield)
Cable capacity	147 pF/m (at 1 kHz, core/shield)
	≤ 3.94 pF/m (capacitance unbalance)
Working capacitance	78 nF (at 1 kHz)
Cable impedance	100 Ω ±20 % (At 31.25 kHz)
Nominal voltage, cable	300 V
Smallest bending radius, fixed installation	75 mm
Tensile strength	260 N
Shield attenuation	3.00 dB/km (at 39 kHz)
Flame resistance	UL 1685 (CSA FT 4)
	UL 1685 (vertical tray)
	UL 1666 (riser)
Special properties	UL standards PLTC-ER and ITC
Ambient temperature (operation)	-40 °C ... 105 °C (cable, fixed installation)

Environmental and real-life conditions

Ambient conditions

Degree of protection	IP65
	IP67
	IP68
	IP69K

Drawings

Dimensional drawing

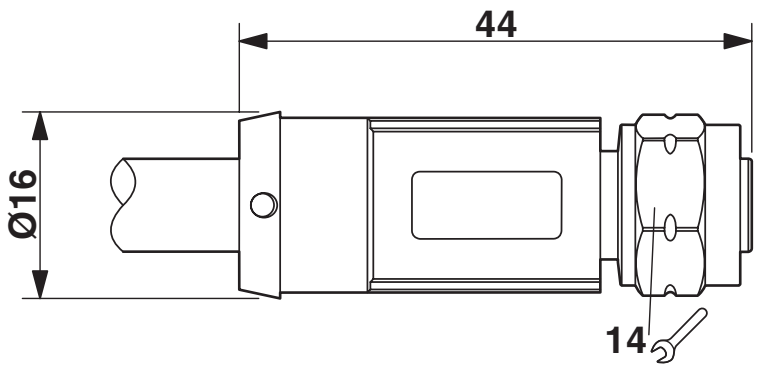

M12 x 1 socket, straight

Schematic diagram

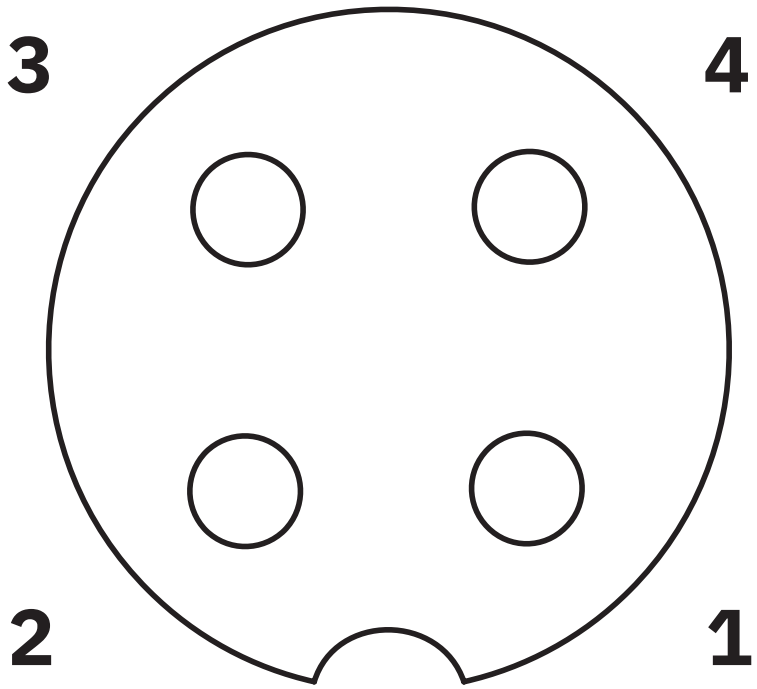

Pin assignment M12 socket, 4-pos., A-coded, view female side

Circuit diagram

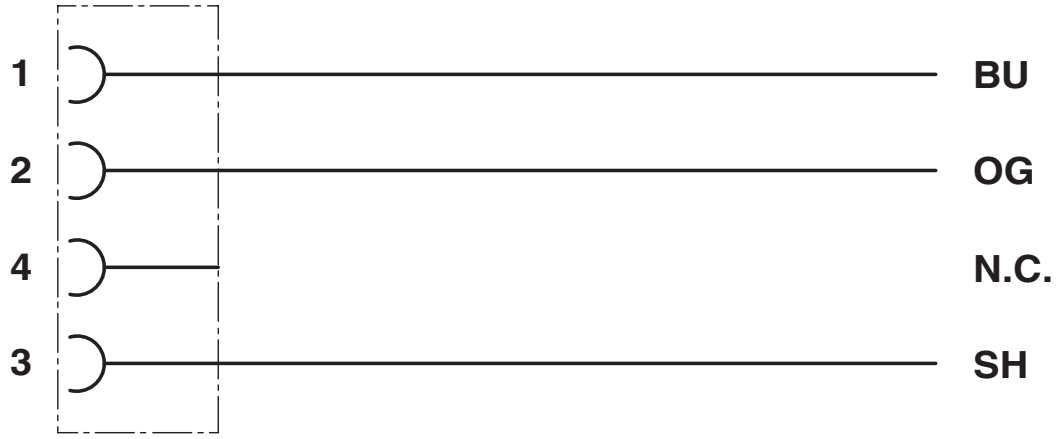

Contact assignment of the M12 socket

Classifications

ECLASS

ECLASS-13.0	27060307
ECLASS-15.0	27060307

ETIM

ETIM 10.0	EC002599

UNSPSC

UNSPSC 21.0	26121600

Environmental product compliance

EU RoHS

Fulfills EU RoHS substance requirements	Yes, No exemptions

China RoHS

Environment friendly use period (EFUP)	EFUP-E
	No hazardous substances above the limits

EU REACH SVHC

REACH candidate substance (CAS No.)	No substance above 0.1 wt%

Phoenix Contact 2026 © - all rights reserved
https://www.phoenixcontact.com

Phoenix Contact USA
586 Fulling Mill Road
Middletown, PA 17057, United States
(+717) 944-1300
info@phoenixcon.com