PROT-M 8 FS-PA-CHAIN - Sealing cap

1430857

https://www.phoenixcontact.com/us/products/1430857

Please be informed that the data shown in this PDF document is generated from our online catalog. Please find the complete data in the user documentation. Our general terms of use for downloads are valid.

M8 sealing cap made of plastic with fixing band for sensor cables, for M8 plugs



Commercial data

Item number	1430857
Packing unit	10 pc
Minimum order quantity	1 pc
Sales key	BF46
Product key	AF1ZAX
GTIN	4046356332866
Weight per piece (including packing)	2.25 g
Weight per piece (excluding packing)	2 g
Customs tariff number	39269097
Country of origin	DE

Technical data

Product properties

Product type	Protective cap
Thread type	M8

Dimensions

Dimensional drawing	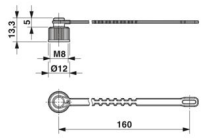
Diameter	12 mm

Material specifications

Material	PA 6.6 GF
	(Holding band)
Seal material	NBR

Environmental and real-life conditions

Ambient conditions

Degree of protection	IP65
	IP67
Ambient temperature (operation) (male connector/female connector)	-25 °C ... 85 °C

Drawings

Dimensional drawing

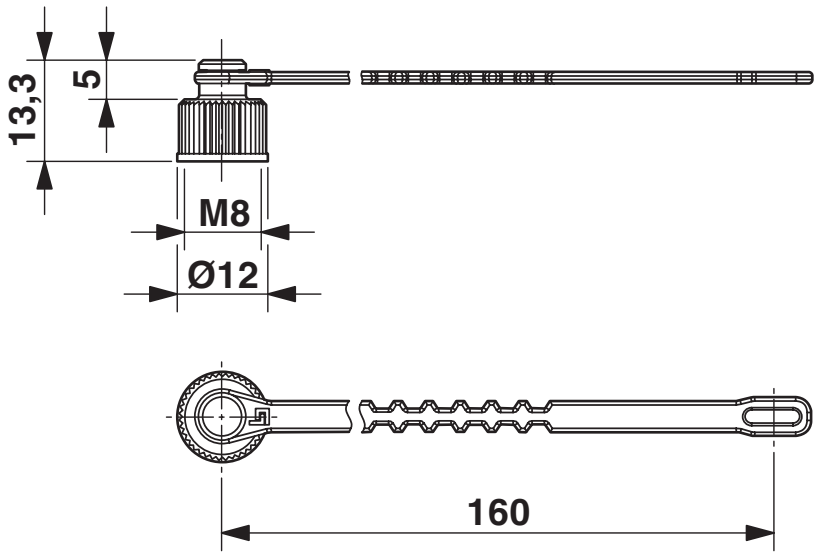

Dimensional drawing

Classifications

ECLASS

ECLASS-13.0	23111190
ECLASS-15.0	27440208

ETIM

ETIM 10.0	EC002314

UNSPSC

UNSPSC 21.0	31261500

Environmental product compliance

EU RoHS

Fulfills EU RoHS substance requirements	Yes, No exemptions

China RoHS

Environment friendly use period (EFUP)	EFUP-E
	No hazardous substances above the limits

EU REACH SVHC

REACH candidate substance (CAS No.)	No substance above 0.1 wt%

EF3.1 Climate Change

CO2e kg	0.219 kg CO2e

Phoenix Contact 2026 © - all rights reserved
https://www.phoenixcontact.com

Phoenix Contact USA
586 Fulling Mill Road
Middletown, PA 17057, United States
(+717) 944-1300
info@phoenixcon.com