SAC-5P-MR/ 1,5-547/FS SCO BK - Sensor/actuator cable

1424881

https://www.phoenixcontact.com/us/products/1424881

Please be informed that the data shown in this PDF document is generated from our online catalog. Please find the complete data in the user documentation. Our general terms of use for downloads are valid.



Sensor/actuator cable, 5-position, PVC, yellow, Plug angled M12, coding: A, on Socket straight M12, coding: A, cable length: 1.5 m

Commercial data

Item number	1424881
Packing unit	1 pc
Minimum order quantity	1 pc
Note	Made to order (non-returnable)
Sales key	BF13
Product key	AF1IFC
GTIN	4055626401539
Weight per piece (including packing)	145.7 g
Weight per piece (excluding packing)	145.7 g
Customs tariff number	85444290
Country of origin	US

Technical data

Product properties

Product type	Sensor/actuator cable
Application	Standard, U.S. cables
Number of positions	5
No. of cable outlets	1
Shielded	no
Coding	A

Insulation characteristics

Overvoltage category	II
Degree of pollution	3

Material specifications

Flammability rating according to UL 94	HB
Seal material	NBR
Material of grip body	TPU, hardly inflammable, self-extinguishing
Contact material	CuSn
Contact surface material	Ni/Au
Contact carrier material	TPU GF
Material for screw connection	Zinc die-cast, nickel-plated
Outer sheath, material	PVC

Electrical properties

Insulation resistance	≥ 10 MΩ
Nominal voltage U_N	48 V AC
	60 V DC
Nominal current I_N	4 A

Signaling

Status display	no
Status display present	no

Connection data

Conductor connection

Tightening torque	0.4 Nm (M12 connector)

Connector

Connection 1

Type	Plug angled M12
Number of positions	5
Coding type	A

Connection 2

Type	Socket straight M12
Number of positions	5
Coding type	A

Cable/line

Cable length	1.5 m

PVC AWG 18 yellow 105°C [547]

Dimensional drawing	
UL AWM Style	2517 (105 °C / 300 V)
Number of positions	5
Shielded	no
Cable type	PVC AWG 18 yellow 105°C [547]
Conductor structure signal line	41x 0.16 mm
AWG signal line	18
Wire diameter incl. insulation	1.7 mm ±0.03 mm
External cable diameter	6.60 mm ±0.2 mm
Outer sheath, material	PVC
External sheath, color	yellow
Conductor material	Tin-plated Cu litz wires
Material, filler	PP
Material wire insulation	PVC
Single wire, color	brown, white, blue, black, gray
Overall twist	5 wires around filler to the core
Nominal voltage, cable	300 V
Minimum bending radius, fixed installation	8 x D
Smallest bending radius, fixed installation	53 mm
Flame resistance	FT4
Special properties	UL ITC/PLTC 105 °C
	CSA AWM I/II A/B FT4 105 °C / 300 V
Ambient temperature (operation)	-30 °C ... 105 °C (cable, fixed installation)

Environmental and real-life conditions

Ambient conditions

	IP65

Degree of protection	IP67
	IP68
Ambient temperature (operation) (male connector/female connector)	-25 °C ... 90 °C (Plug / socket)

Standards and regulations

Standard designation	M12 connector
Standards/specifications	IEC 61076-2-101

Drawings

Dimensional drawing

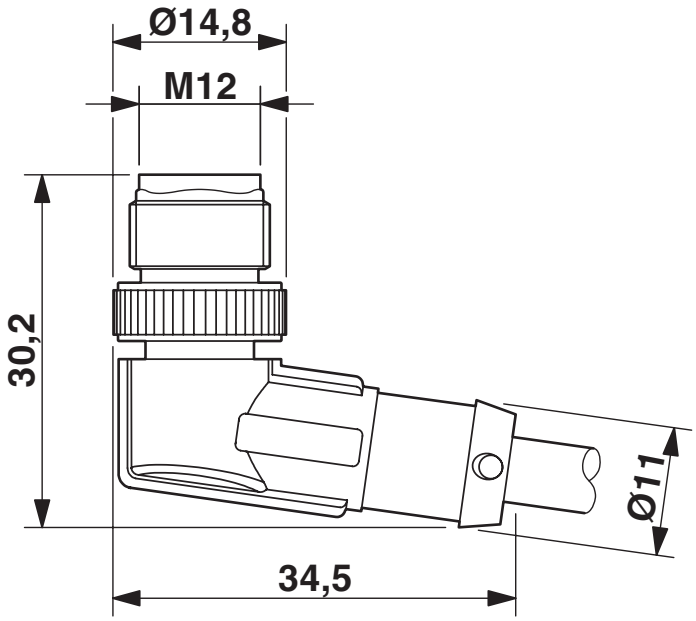

M12 x 1 male plug, angled

Dimensional drawing

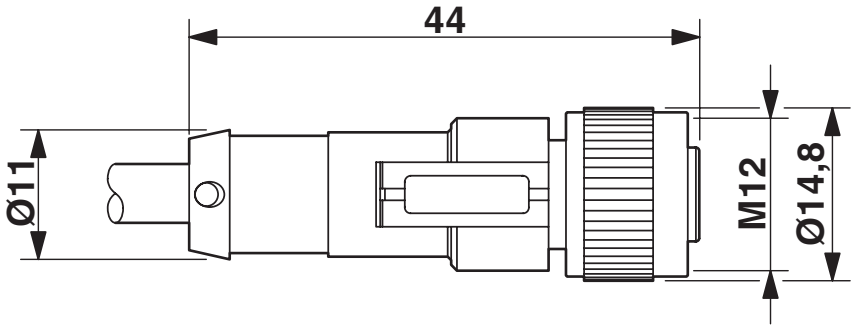

M12 x 1 socket, straight

Schematic diagram

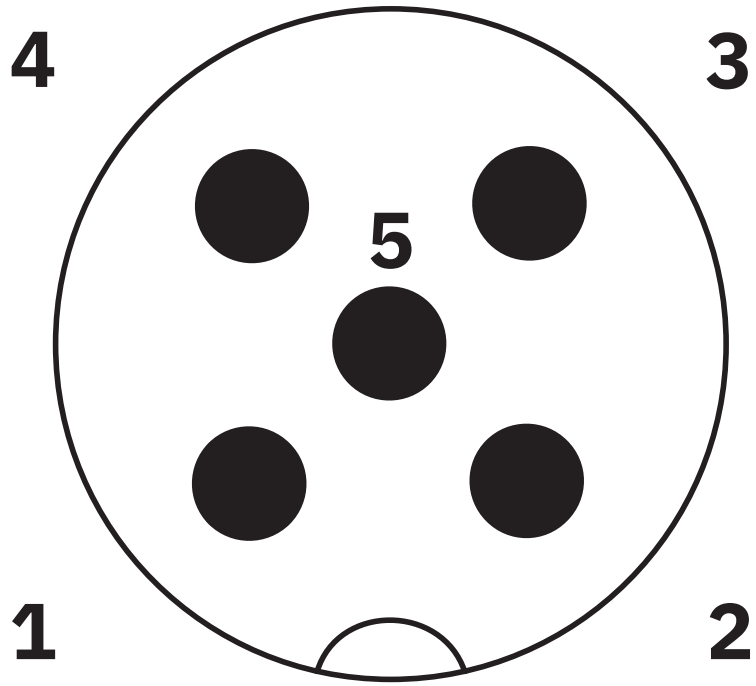

Pin assignment M12 male connector, 5-pos., A-coded, male side

Schematic diagram

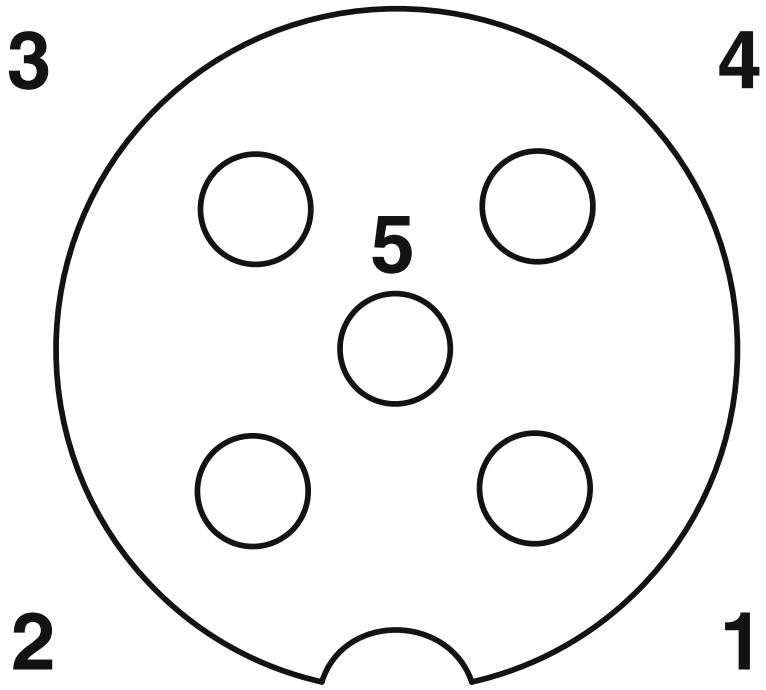

Pin assignment M12 socket, 5-pos., A-coded, female side

Circuit diagram



Contact assignment of the M12 plug and the M12 socket

Approvals

To download certificates, visit the product detail page: https://www.phoenixcontact.com/us/products/1424881

UL Listed
Approval ID: FILE E 221474

	Nominal voltage U_N	Nominal current I_N	Cross section AWG	Cross section mm^2
keine				
	125 V	4 A	-	-

cUL Listed
Approval ID: FILE E 221474

	Nominal voltage U_N	Nominal current I_N	Cross section AWG	Cross section mm^2
keine				
	125 V	4 A	-	-

EAC-RoHS
Approval ID: RU D-DE.HB35.B.00387

Classifications

ECLASS

ECLASS-13.0	27060311
ECLASS-15.0	27060311

ETIM

ETIM 10.0	EC001855

UNSPSC

UNSPSC 21.0	26121600

Environmental product compliance

EU RoHS

Fulfills EU RoHS substance requirements	Yes, No exemptions

China RoHS

Environment friendly use period (EFUP)	EFUP-50
	An article-related China RoHS declaration table can be found in the download area for the respective article under "Manufacturer declaration". For all articles with EFUP-E, no China RoHS declaration table issued and required.

EU REACH SVHC

REACH candidate substance (CAS No.)	No substance above 0.1 wt%

Phoenix Contact 2026 © - all rights reserved
https://www.phoenixcontact.com

Phoenix Contact USA
586 Fulling Mill Road
Middletown, PA 17057, United States
(+717) 944-1300
info@phoenixcon.com