HC-STA-B48-HHFS-1STP29-EM-AL - Housing

1424857

https://www.phoenixcontact.com/us/products/1424857

Please be informed that the data shown in this PDF document is generated from our online catalog. Please find the complete data in the user documentation. Our general terms of use for downloads are valid.



Sleeve housing B48, for single locking latch, material: Die-cast aluminum, salt water resistant, cable outlets: 1, lateral, 1x Pg29, height: 107.5 mm, cable gland: none, Standard

Your advantages

- Good shielding in the event of electromagnetic interference

Commercial data

Item number	1424857
Packing unit	1 pc
Minimum order quantity	1 pc
Sales key	BF56
Product key	AF7APB
GTIN	4055626382623
Weight per piece (including packing)	614.5 g
Weight per piece (excluding packing)	592.2 g
Customs tariff number	85389099
Country of origin	CN

Technical data

Notes

General	This housing can be combined with cable glands with a maximum wrench size of 58 mm

Product properties

Product type	Housing with locking latch
Housing type	Sleeve housing
Application	Standard
Type	B48
No. of cable outlets	1
Type of the screw connection	1x Pg29
Cable outlet	lateral
Pg screw connection	none

Dimensions

Dimensional drawing	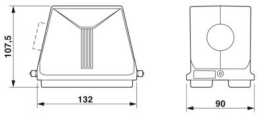
Width	90 mm
Height	107.5 mm
Length	132 mm

Material specifications

Housing material	Die-cast aluminum, salt water resistant
Housing surface material	uncoated

Mechanical properties

Mechanical data

Type of the screw connection	1x Pg29
Locking type	Pin

Environmental and real-life conditions

Ambient conditions

Degree of protection	IP66
	IP67
Enclosure rating (NEMA)	4 (UL 50e)
	4X (UL 50e)
	12 (UL 50e)
Impact strength	IK08

Ambient temperature (operation)	-40 °C ... 125 °C

Drawings

Dimensional drawing

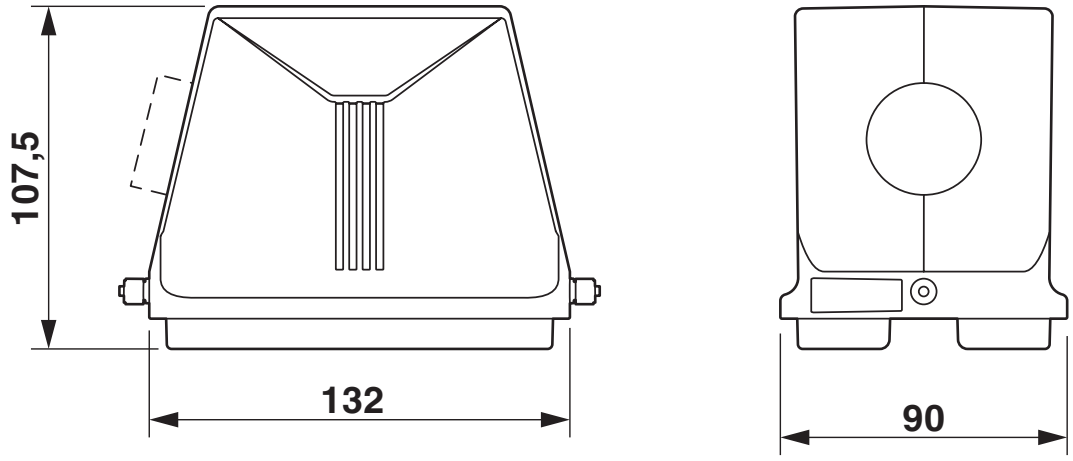

Dimensional drawing

Approvals

To download certificates, visit the product detail page: https://www.phoenixcontact.com/us/products/1424857

DNV
Approval ID: TAE000037S

cUL Recognized
Approval ID: E255026

UL Recognized
Approval ID: E255026

Classifications

ECLASS

ECLASS-13.0	27440202
ECLASS-15.0	27440202

ETIM

ETIM 10.0	EC000437

UNSPSC

UNSPSC 21.0	31261500

Environmental product compliance

EU RoHS

Fulfills EU RoHS substance requirements	Yes, No exemptions

China RoHS

Environment friendly use period (EFUP)	EFUP-E
	No hazardous substances above the limits

EU REACH SVHC

REACH candidate substance (CAS No.)	No substance above 0.1 wt%

Phoenix Contact 2026 © - all rights reserved
https://www.phoenixcontact.com

Phoenix Contact USA
586 Fulling Mill Road
Middletown, PA 17057, United States
(+717) 944-1300
info@phoenixcon.com