SACC-M12FR-5PL SH DN - Data connector

1424673

https://www.phoenixcontact.com/us/products/1424673

Please be informed that the data shown in this PDF document is generated from our online catalog. Please find the complete data in the user documentation. Our general terms of use for downloads are valid.



Data connector, CANopen®, DeviceNet™, 5-position, shielded, Socket angled M12, coding: A, Push-lock spring connection, knurl material: Zinc die-cast, nickel-plated, external cable diameter 4 mm ... 8 mm

Your advantages

- Time-saving Push-Lock connection: Tool-free connection and disconnection of conductors by opening the contact levers
- Intuitive connection: Easy assignment of individual litz wires with color-coded and numerical identification of the contact levers
- Integrated Push-in Technology: Wire rigid and pretreated conductors easily by means of simple, direct insertion
- Shock- and vibration-resistant connection: Proven spring-cage technology guarantees secure and reliable contacting
- Safely shielded: Reliable 360° shield connection even under extreme mechanical strain
- Flexible cable outlets with angled connectors

Commercial data

Item number	1424673
Packing unit	1 pc
Minimum order quantity	1 pc
Sales key	BF33
Product key	AF2CFD
GTIN	4055626376004
Weight per piece (including packing)	44.3 g
Weight per piece (excluding packing)	44.3 g
Customs tariff number	85366990
Country of origin	DE

Technical data

Notes

Assembly note	NOTE: Observe the permissible bending radii when routing cables, since the degree of protection may be at risk if the bending forces are too high. Reduce mechanical loads upstream of the connector, e.g., by using cable ties.

Mounting

Assembly note	The connector pin assignment can be rotated 45° to the cable outlet
	The wires can be connected both with ferrules and without ferrules

Product properties

Product type	Circular connector (cable-side)
Application	Data
Number of positions	5
No. of cable outlets	1
Shielded	yes
Coding	A
Cable outlet	angled

Insulation characteristics

Overvoltage category	II
Degree of pollution	3

Dimensions

Dimensional drawing	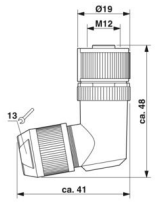
Length	48 mm

External dimensions

Outside diameter	4 mm ... 8 mm

Housing

Diameter housing	19 mm

Material specifications

Material	TPE-U (Clamping cage, weight: 1.1 g)
	PA 6 (Actuation lever)

Flammability rating according to UL 94	V0
Seal material	NBR
Material of grip body	Zinc die-cast, nickel-plated
Contact material	CuSn
Contact surface material	Ni/Au
Contact carrier material	PA 6.6
Material for screw connection	Zinc die-cast, nickel-plated

Connection data

Conductor connection

Connection method	Push-lock spring connection
Connection cross section	0.14 mm² ... 0.75 mm² (without ferrule)
	0.14 mm² ... 0.5 mm² (with ferrule)
Connection cross section AWG	26 ... 18 (without ferrule)
	26 ... 20 (with ferrule)
Stripping length of the individual wire	7 mm
Tightening torque	0.4 Nm (M12 knurl)
	0.8 Nm (Connector with coupling sleeve)
	3 Nm (Pressure nut with coupling sleeve)

Connection assignment

Contact | Color (signal designation) | Contact (optional)	1 = GY (shield)
	2 = RD
	3 = BK
	4 = WH
	5 = BU

Electrical properties

Rated surge voltage	1.5 kV
Insulation resistance	≥ 100 MΩ
Nominal voltage U_N	48 V AC
	60 V DC
Nominal current I_N	4 A (2 A when using 0.14 mm² conductors)

Mechanical properties

Mechanical data

Insertion/withdrawal cycles	≥ 100

Connector

Connection 1

Head design	Socket
Head cable outlet	angled
Head thread type	M12

Coding	A

Interfaces

Signal type/category	CANopen®
	DeviceNet™

Environmental and real-life conditions

Ambient conditions

Degree of protection	IP65
	IP67
Ambient temperature (operation) (male connector/female connector)	-40 °C ... 85 °C (Plug / socket)

Standards and regulations

Standards/regulations	PA 6.6: Fire protection in rail vehicles - requirement sets R22, R23, R24, R25, and R26 acc. to DIN EN 45545-2 (Risk level HL1 - HL3)
	PA 6: Fire protection in rail vehicles - requirement sets R22, R23, and R24 acc. to DIN EN 45545-2 (Risk level HL1 - HL3)

M12

Standard designation	M12 connector
Standards/specifications	IEC 61076-2-101
Standard designation	Shock, vibration
Standards/specifications	EN 50155:2001

Drawings

Dimensional drawing

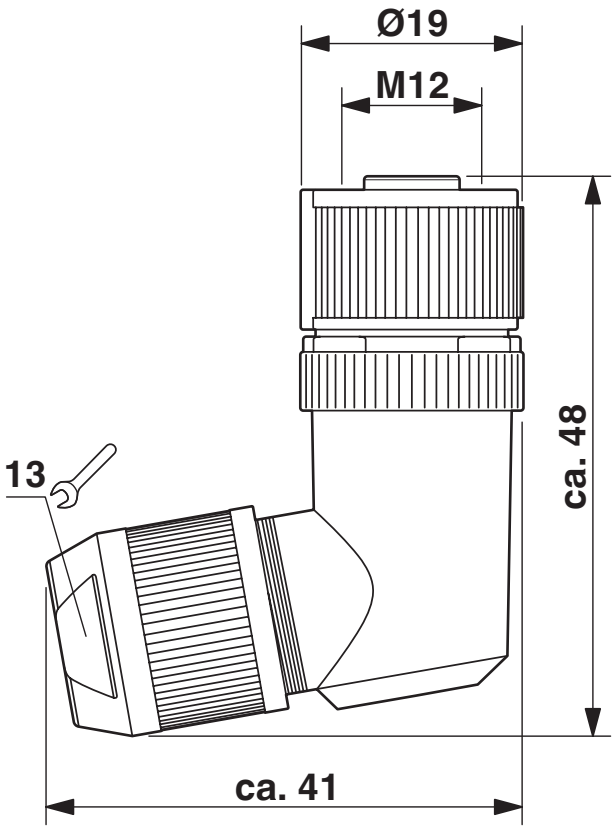

Socket M12-SPEEDCON, angled, shielded

Functional drawing

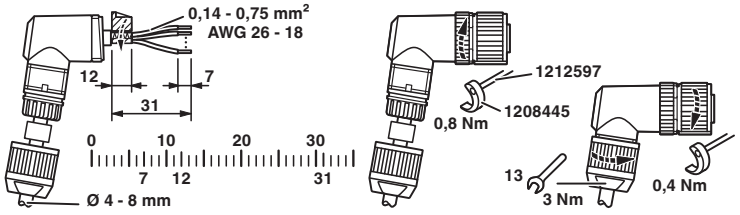

Slide the pressure nut and sleeve housing along the cable, strip the cable, shorten the shield, strip the single wires, connect the wires, in the case of a straight sleeve housing gently twist the wires together, stick the shielding foil around the shortened shield, in the case of a cable outside diameter < 6 mm stick an additional shielding foil around the wire pack, screw the sleeve housing to the plug insert, screw the pressure nut tight.

Schematic diagram

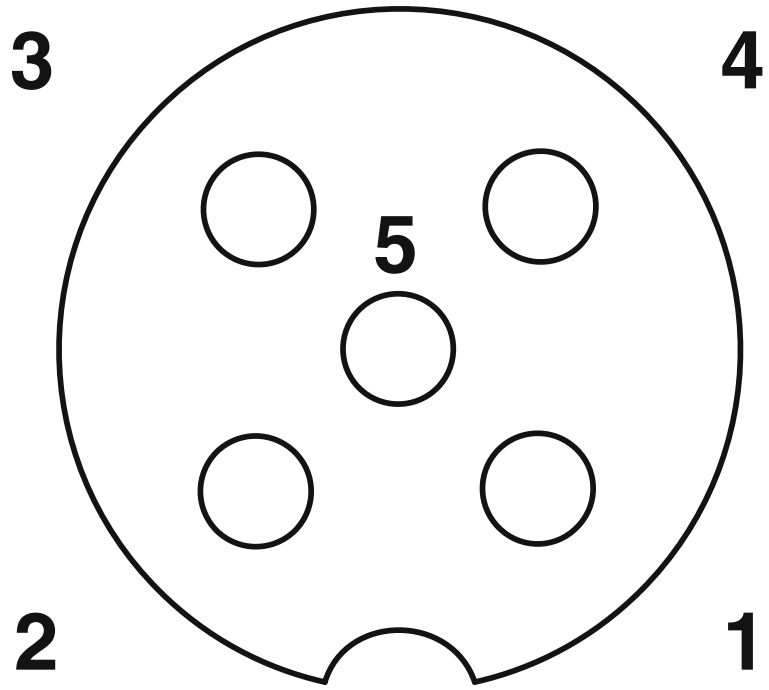

Pin assignment M12 socket, 5-pos., A-coded, socket side view

Approvals

To download certificates, visit the product detail page: https://www.phoenixcontact.com/us/products/1424673

UL Listed
Approval ID: E221474

	Nominal voltage U_N	Nominal current I_N	Cross section AWG	Cross section mm^2
keine				
	60 V	4 A	26 - 18	26 - 18

cUL Listed
Approval ID: E221474

	Nominal voltage U_N	Nominal current I_N	Cross section AWG	Cross section mm^2
keine				
	60 V	4 A	26 - 18	-

Classifications

ECLASS

ECLASS-13.0	27440116
ECLASS-15.0	27440116

ETIM

ETIM 10.0	EC002635

UNSPSC

UNSPSC 21.0	39121400

Environmental product compliance

EU RoHS

Fulfills EU RoHS substance requirements	Yes, No exemptions

China RoHS

Environment friendly use period (EFUP)	EFUP-E
	No hazardous substances above the limits

EU REACH SVHC

REACH candidate substance (CAS No.)	No substance above 0.1 wt%

Phoenix Contact 2026 © - all rights reserved
https://www.phoenixcontact.com

Phoenix Contact USA
586 Fulling Mill Road
Middletown, PA 17057, United States
(+717) 944-1300
info@phoenixcon.com