# A-INL-PG11-P-BK - Counter nut

1424560

https://www.phoenixcontact.com/us/products/1424560

Please be informed that the data shown in this PDF document is generated from our online catalog. Please find the complete data in the user documentation. Our general terms of use for downloads are valid.

Counter nut, connecting thread: Pg11, color: jet black



## Commercial data

| | |
|---|---|
| Item number | 1424560 |
| Packing unit | 5 pc |
| Minimum order quantity | 1 pc |
| Sales key | BF68 |
| Product key | AF7DZX |
| GTIN | 4055626374642 |
| Weight per piece (including packing) | 2.3 g |
| Weight per piece (excluding packing) | 2.1 g |
| Customs tariff number | 39269097 |
| Country of origin | TR |

## Technical data

### Product properties

| | |
|---|---|
| Product type | Flat nut |

### Dimensions

| | |
|---|---|
| Dimensional drawing | 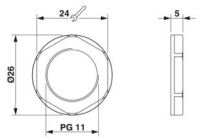 |
| Length | 5 mm |
| Diameter Connecting thread | 18.6 mm |
| Connecting thread diameter | 18.6 mm |
| Wrench size, counter nut | 24 mm |
| Hexagon angular dimension | 26 mm |
| Thread type connection side | Pg11 |

### Material specifications

| | |
|---|---|
| Material | PA 6.6 GF |
| Flammability rating according to UL 94 | V2 |

### Cable/line

| | |
|---|---|
| Halogen-free | yes |

### Environmental and real-life conditions

#### Ambient conditions

| | |
|---|---|
| Ambient temperature (operation) | -40 °C ... 100 °C |

## Drawings

Dimensional drawing

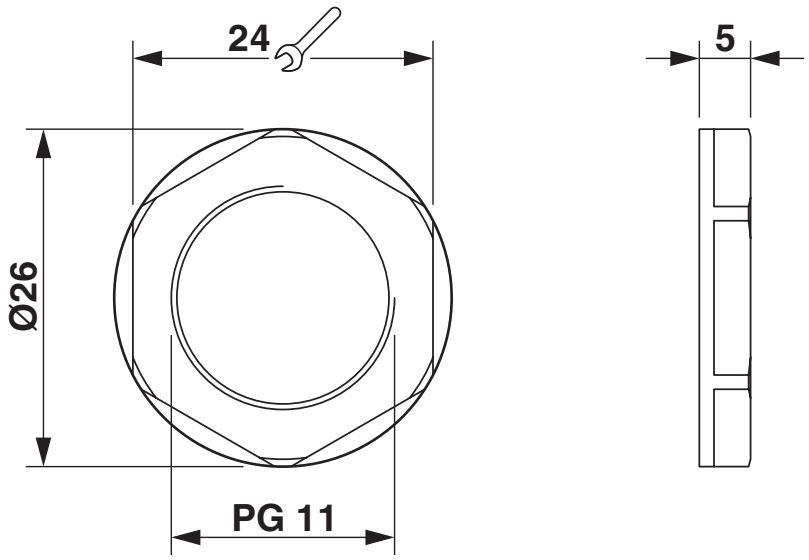

## Classifications

### ECLASS

| | |
|---|---|
| ECLASS-13.0 | 27140807 |
| ECLASS-15.0 | 27140807 |

### ETIM

| | |
|---|---|
| ETIM 10.0 | EC003608 |

### UNSPSC

| | |
|---|---|
| UNSPSC 21.0 | 31161700 |

## Environmental product compliance

EU RoHS

| | |
|---|---|
| Fulfills EU RoHS substance requirements | Yes, No exemptions |

China RoHS

| | |
|---|---|
| Environment friendly use period (EFUP) | EFUP-E |
| | No hazardous substances above the limits |

EU REACH SVHC

| | |
|---|---|
| REACH candidate substance (CAS No.) | No substance above 0.1 wt% |

EF3.1 Climate Change

| | |
|---|---|
| CO2e kg | 0.02 kg CO2e |


Phoenix Contact 2026 © - all rights reserved
https://www.phoenixcontact.com



Phoenix Contact USA
586 Fulling Mill Road
Middletown, PA 17057, United States
(+717) 944-1300
info@phoenixcon.com