A-INSP-PG16-65N-P-LG - Screw plug

1424523

https://www.phoenixcontact.com/us/products/1424523

Please be informed that the data shown in this PDF document is generated from our online catalog. Please find the complete data in the user documentation. Our general terms of use for downloads are valid.



Screw plug, material for screw connection: PA, connecting thread: Pg16, color: lightgray RAL 7035

Commercial data

Item number	1424523
Packing unit	10 pc
Minimum order quantity	1 pc
Sales key	BF68
Product key	AF7DZX
GTIN	4055626374284
Weight per piece (including packing)	2.59 g
Weight per piece (excluding packing)	2.18 g
Customs tariff number	39269097
Country of origin	DE

Technical data

Product properties

Product type	Plug for cable screw gland

Dimensions

Dimensional drawing	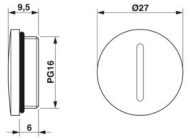
Length	9.5 mm
Length of the connecting thread	6 mm
Diameter Connecting thread	22.5 mm
Diameter	27 mm
Diameter	27 mm
Connecting thread diameter	22.5 mm
Hexagon angular dimension	Diameter
Thread type connection side	Pg16

Material specifications

Material	PA
Seal material	EPDM (O-ring)
Material for screw connection	PA

Environmental and real-life conditions

Ambient conditions

Degree of protection	IP65
Ambient temperature (operation)	-40 °C ... 100 °C

Drawings

Dimensional drawing

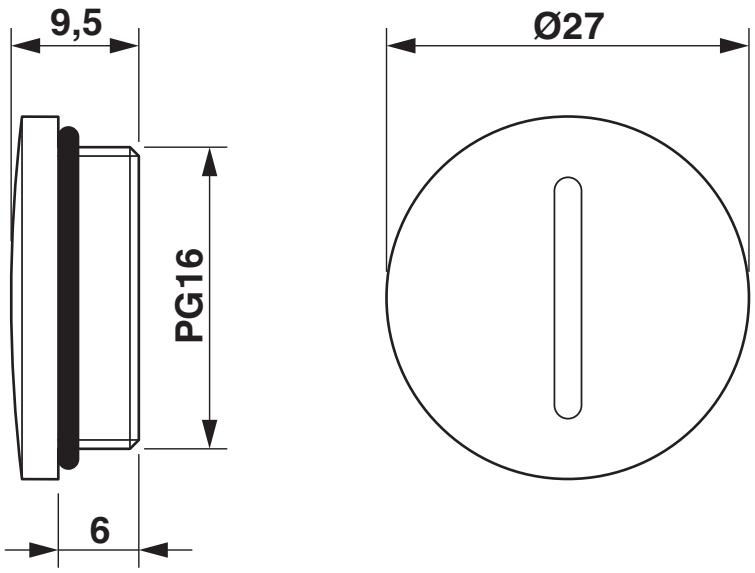

Dimensional drawing

Classifications

ECLASS

ECLASS-13.0	23111190
ECLASS-15.0	27140805

ETIM

ETIM 10.0	EC000032

UNSPSC

UNSPSC 21.0	31261500

Environmental product compliance

EU RoHS

Fulfills EU RoHS substance requirements	Yes, No exemptions

China RoHS

Environment friendly use period (EFUP)	EFUP-E
	No hazardous substances above the limits

EU REACH SVHC

REACH candidate substance (CAS No.)	No substance above 0.1 wt%

EF3.1 Climate Change

CO2e kg	0.023 kg CO2e

Phoenix Contact 2026 © - all rights reserved
https://www.phoenixcontact.com

Phoenix Contact USA
586 Fulling Mill Road
Middletown, PA 17057, United States
(+717) 944-1300
info@phoenixcon.com